Operator’s Manual

Pump

PS2 1500

Type	PS2 1500
Document	5000184934 / 3300027737
Date	0824
Revision	06
Language	EN

5 0 0 0 1 8 4 9 3 4

Copyright notice

© Copyright 2024 by Wacker Neuson America Corporation

All rights, including copying and distribution rights, are reserved.

This publication may be photocopied by the original purchaser of the machine. Any other type of reproduction is prohibited without express written permission from Wacker Neuson America Corporation.

Any type of reproduction or distribution not authorized by Wacker Neuson America Corporation represents an infringement of valid copyrights. Violators will be prosecuted.

Trademarks

All trademarks referenced in this manual are the property of their respective owners.

Manufacturer

Wacker Neuson America Corporation

N92W15000 Anthony Avenue

Menomonee Falls, WI 53051 U.S.A.

Tel: (262) 255-0500 · Fax: (262) 255-0550 · Tel: (800) 770-0957

www.wackerneuson.com

Original instructions

This Operator's Manual presents the original instructions. The original language of this Operator's Manual is American English.

Foreword

SAVE THESE INSTRUCTIONS—This manual contains important instructions for the machine models below. These instructions have been written expressly by Wacker Neuson America Corporation and must be followed during installation, operation, and maintenance of the machines.

Machines discussed in this manual:

Part No.	PS2 1500 0620458

Machine documentation

- From this point forward in this documentation, Wacker Neuson America Corporation will be referred to as Wacker Neuson.
- Keep a copy of the Operator's Manual with the machine at all times.
- For spare parts information, please see your Wacker Neuson Dealer, or visit the Wacker Neuson website at http://www.wackerneuson.com/.
- When ordering parts or requesting service information, be prepared to provide the machine model number, item number, revision number, and serial number.

Expectations for information in this manual

- This manual provides information and procedures to safely operate and maintain the above Wacker Neuson model(s). For your own safety and to reduce the risk of injury, carefully read, understand, and observe all instructions described in this manual.
- Wacker Neuson expressly reserves the right to make technical modifications, even without notice, which improve the performance or safety standards of its machines.
- The information contained in this manual is based on machines manufactured up until the time of publication. Wacker Neuson reserves the right to change any portion of this information without notice.
- The illustrations, parts, and procedures in this manual refer to Wacker Neuson factory-installed components. Your machine may vary depending on the requirements of your specific region.

Manufacturer's approval

This manual contains references to *approved* parts, attachments, and modifications. The following definitions apply:

- **Approved parts or attachments** are those either manufactured or provided by Wacker Neuson.
- **Approved modifications** are those performed by an authorized Wacker Neuson service center according to written instructions published by Wacker Neuson.
- **Unapproved parts, attachments, and modifications** are those that do not meet the approved criteria.

Unapproved parts, attachments, or modifications may have the following consequences:

- Serious injury hazards to the operator and persons in the work area
- Permanent damage to the machine which will not be covered under warranty

Contact your Wacker Neuson dealer immediately if you have questions about approved or unapproved parts, attachments, or modifications.

Foreword 3

1 Safety Information 7

1.1 Signal Words Used in this Manual 7
1.2 Machine Description and Intended Use 7
1.3 Operating and Electrical Safety 9
1.4 Service Safety 10
1.5 Labels 11

2 Lifting and Transporting 12

3 Installation 13

3.1 Components 13
3.2 Preparing the Machine for First Use 14
3.3 Application Area 14
3.4 Preparing for Installation 15
3.5 Checks to Make Before Installation 15
3.6 Discharge Fittings 16
3.7 Electrical Wiring 17
3.8 Connecting the Power Supply 17
3.9 Cable Assembly 18

4 Operation 19

4.1 Before Starting 19
4.2 Operating Water Level 21
4.3 Motor Protection System 22
4.4 Emergency Shutdown Procedure 22

5 Maintenance 23

5.1 Periodic Maintenance Schedule 23
5.2 Maintenance and Inspection 24
5.3 Storage 24
5.4 Inspecting and Replacing Lubricant 24
5.5 Replacement Parts 25
5.6 Disassembly and Reassembly 26
5.7 Disassembly 27

5.8 Reassembly 28
5.9 Troubleshooting 29

6 Technical Data 30

6.1 Standard Specifications 30
6.2 Operating Specifications 30
6.3 Dimensions 31

7 AEM Safety Manual 33

8 Schematics 51

9 EC Declaration of Conformity 53

1 Safety Information

1.1 Signal Words Used in this Manual

This manual contains DANGER, WARNING, CAUTION, *NOTICE,* and NOTE signal words which must be followed to reduce the possibility of personal injury, damage to the equipment, or improper service.

This is the safety alert symbol. It is used to alert you to potential personal hazards.

► Obey all safety messages that follow this symbol.

DANGER
DANGER indicates a hazardous situation which, if not avoided, will result in death or serious injury.

► To avoid death or serious injury from this type of hazard, obey all safety messages that follow this signal word.

WARNING
WARNING indicates a hazardous situation which, if not avoided, could result in death or serious injury.

► To avoid possible death or serious injury from this type of hazard, obey all safety messages that follow this signal word.

CAUTION
CAUTION indicates a hazardous situation which, if not avoided, could result in minor or moderate injury.

► To avoid possible minor or moderate injury from this type of hazard, obey all safety messages that follow this signal word.

NOTICE:Used without the safety alert symbol, NOTICE indicates a situation which, if not avoided, could result in property damage.

Note: *A Note contains additional information important to a procedure.*

1.2 Machine Description and Intended Use

This machine is a submersible water pump. The Wacker Neuson Submersible Pump consists of an electric motor, an impeller, a strainer, and a metal casing with ports for water suction and discharge. Power is supplied to the pump through a corded plug or a hard-wired connection, depending on the installation. The operator connects hoses to the pump and routes them so that water is pumped from the work area and discharged into an appropriate location.

This machine is intended to be used for general de-watering applications. This machine is intended for the pumping of clear water, or water containing solids up to the size stated within the product's specifications, and up to the flow, head, and suction lift limits also stated within the product's specifications.

This machine has been designed and built strictly for the intended use described above. Using the machine for any other purpose could permanently damage the machine or seriously injure the operator or other persons in the area. Machine damage caused by misuse is not covered under warranty.

The following are some examples of misuse:

- Pumping flammable, explosive, or corrosive fluids
- Pumping hot or volatile fluids that result in pump cavitation
- Operating the pump outside of product specifications due to incorrect diameter hoses, incorrect length hoses, other inlet or outlet restrictions, or excessive suction lift or head
- Using the machine as a ladder, support, or work surface
- Using the machine to carry or transport passengers or equipment
- Operating the machine outside of factory specifications
- Operating the machine in a manner inconsistent with all warnings found on the machine and in the Operator's Manual.

This machine has been designed and built in accordance with the latest global safety standards. It has been carefully engineered to eliminate hazards as far as practicable and to increase operator safety through protective guards and labeling. However, some risks may remain even after protective measures have been taken. They are called residual risks. On this machine, they may include exposure to:

- Electric shock from improper electrical connections or high voltage
- Personal injury from improper lifting techniques
- Projectile hazard from discharge

To protect yourself and others, make sure you thoroughly read and understand the safety information presented in this manual before operating the machine.

1.3 Operating and Electrical Safety

This pump has not been investigated for use in swimming pool areas.

An acceptable motor-control switch shall be provided at the time of installation according to local codes and regulations.

WARNING
Electric shock hazard.

► To reduce risk of electric shock, connect only to a properly grounded, grounding-type receptacle.

► To reduce risk of electric shock, follow instructions in this manual for proper installation.

CAUTION
Electric shock hazard. This pump may automatically restart.

► Prior to working on the pump or control panel, all supply circuits must be disconnected.

► Do not remove cord and strain relief.

Operator qualifications

Only trained personnel are permitted to start, operate, and shut down the machine. They also must meet the following qualifications:

- Have received instruction on how to properly use the machine
- Are familiar with required safety devices

The machine must not be accessed or operated by:

- Children
- People impaired by alcohol or drugs

Personal Protective Equipment (PPE)

Wear the following Personal Protective Equipment (PPE) while operating this machine:

- Close-fitting work clothes that do not hinder movement
- Safety glasses with side shields
- Hearing protection
- Safety-toed footwear

1.4 Service Safety

Service training

Before servicing or maintaining the machine:

- Read and understand the instructions contained in all manuals delivered with the machine.
- Familiarize yourself with the location and proper use of all controls and safety devices.
- Only trained personnel shall troubleshoot or repair problems occurring with the machine.
- Contact Wacker Neuson for additional training if necessary.

When servicing or maintaining this machine:

- Do not allow improperly trained people to service or maintain the machine. Personnel servicing or maintaining the machine must be familiar with the associated potential risks and hazards.

Personal Protective Equipment (PPE)

Wear the following Personal Protective Equipment (PPE) while servicing or maintaining this machine:

- Close-fitting work clothes that do not hinder movement
- Safety glasses with side shields
- Hearing protection
- Safety-toed footwear

In addition, before servicing or maintaining the machine:

- Tie back long hair.
- Remove all jewelry (including rings).

Replacing parts and labels

- Replace worn or damaged components.
- Replace all missing and hard-to-read labels.
- When replacing electrical components, use components that are identical in rating and performance to the original components.
- When replacement parts are required for this machine, use only Wacker Neuson replacement parts or those parts equivalent to the original in all types of specifications, such as physical dimensions, type, strength, and material.

1.5 Labels

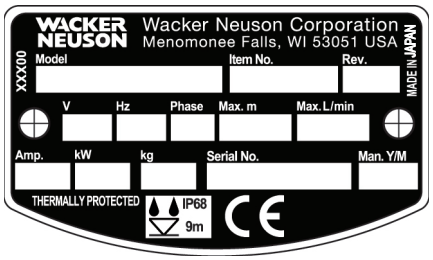	A nameplate listing the model number, item number, revision number, and serial number is attached to each unit. Please record the information found on this nameplate so it will be available should the nameplate become lost or damaged. When ordering parts or requesting service information, you will always be asked to specify the model number, item number, revision number, and serial number of the unit.
  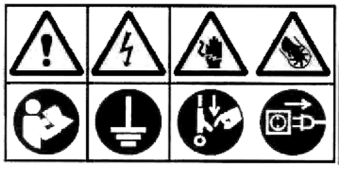	CAUTION Do not attempt to operate this product before reading the Operator's Manual and understanding its contents. Mishandling of this product may result in explosion, fire, or electrical shock. ■ Do not pull on the power cord or use the power cord to lift the pump. ■ Always use a dedicated ground leakage circuit breaker. ■ Be sure to install the ground wire securely. ■ Be sure to disconnect the power supply before handling or inspecting the pump. Never insert your hand into the pump inlet holes while the pump is connected to the power supply.

2 Lifting and Transporting

WARNING

Do not under any circumstances install or move the pump by suspending it from the cable assembly. The cable may be damaged, causing electrical leakage, shock, or fire.

CAUTION

When installing the pump, pay close attention to its center of gravity and weight. If it is not lowered into place correctly, it may fall and be damaged or cause injury.

When transporting the pump by hand, be sure to employ manpower commensurate with the weight of the pump. To avoid back injury when lifting the pump, bend the knees to pick it up rather than bending your back only.

Avoid dropping the pump or other strong impact. Lift the pump by holding it firmly with the hands or by attaching a rope or chain to the handle.

3 Installation

3.1 Components

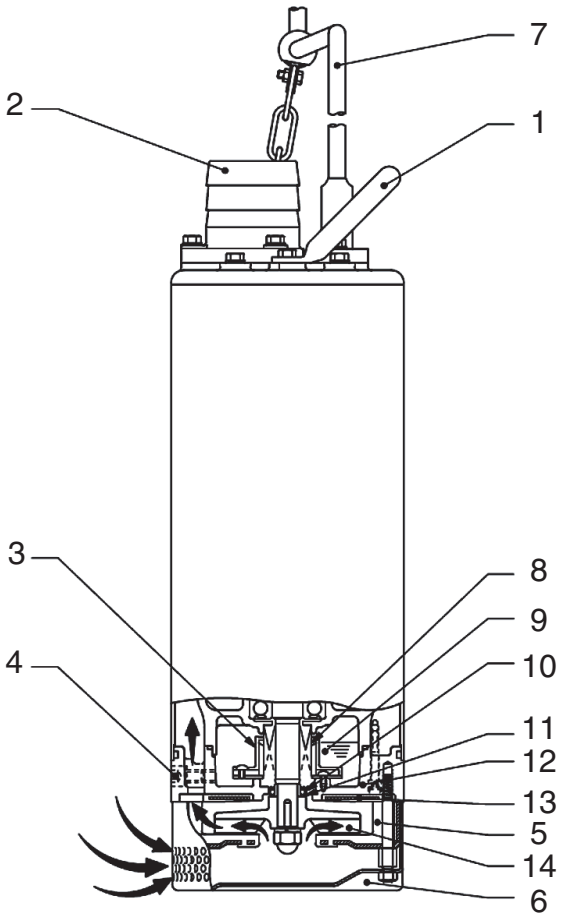

wc_gr007025

Ref	Description	Ref	Description
1	Lifting handle	8	Seal-mechanical
2	Coupling	9	Lubricant
3	Oil lifter	10	Seal-dust (V-ring)
4	Oil plug	11	Shaft sleeve
5	Pump casing	12	Housing-oil
6	Strainer	13	Wear ring
7	Cable assembly	14	Impeller

3.2 Preparing the Machine for First Use

When the pump is delivered, first perform the following inspection checks:

- While unpacking, inspect the product for damage during shipment, and make sure all bolts and nuts are tightened properly.
- Check the model number to make sure it is the product that was ordered. Be certain it is the correct voltage and frequency.

Note: *If there is any problem with the product as shipped, contact your nearest dealer or Wacker Neuson representative at once.*

CAUTION

Personal injury hazard. Failure to observe this caution can lead to electrical shock, current leakage, fire, water leakage, or other problems.

► Do not operate this product under any conditions other than those for which it is specified.

3.3 Application Area

WARNING

If the pump is used for outdoor fountains, garden ponds and similar places, or to drain a swimming pool, the pump must be supplied by an isolating transformer or connected to a Residual Current Device (RCD) with a residual operating current not exceeding 30 mA.

The pump must not be used when people are in the water.

Leakage of pump lubricants may cause pollution of water.

Proper plug must be provided according to local codes and standards. Refer to wiring diagram.

Do not use this pump in liquids other than water, such as oil, salt water, or organic solvents.

Use with a power supply voltage within ±5% of the rated voltage.

Do not use in water temperatures outside the range of 0–40°C

(32–104°F) which can lead to failure, electrical leakage or shock.

Do not use in the vicinity of explosive or flammable materials.

Use only in fully assembled state.

Note: *Consult your local dealer or Wacker Neuson representative before using with any liquids other than those indicated in this manual.*

3.3.1 Install the pump in a location with sufficient water level, where water collects readily.
Note: *See "Operating Water Level"* for *the water level necessary for operation. The discharge end of the hose should be located higher than the water surface. If the end of the hose is submerged, water may flow back to the pump when the pump is stopped; and if the hose end is lower than the water surface, water may overflow when the pump is turned off.*

3.3.2 The hose should be run as straight as possible, since excessive bending will hinder the water flow, preventing sufficient lift, and can even cause the hose to become clogged with earth. If the hose is crimped near the pump, air can become trapped in the pump and cause idle running.

CAUTION
Personal injury hazard. If large quantities of earth are sucked up, damage resulting from friction in the pump can lead to electrical leakage and shock.
► Use the pump in the upright position. To prevent the pump from becoming submerged in mud, mount it on a block or other firm base if necessary.

3.3.3 If used in a permanent installation, where the pump is not readily accessible after installation, please contact Wacker Neuson for a duplicate nameplate to be installed at the wellhead or on the control box so that it will be readily visible.

3.4 Preparing for Installation

Before installing the pump at a work site, you will need to have the following tools and instruments ready:

- Insulation resistance tester (megohmmeter)
- AC voltmeter
- AC ammeter (clamp-on type)
- Bolt and nut tighteners
- Power supply connection tools (screwdriver or box wrench)

Note: *Please also read the instructions that come with each of the test instruments.*

3.5 Checks to Make Before Installation

When a grounded plug is used:

- Use the megohmmeter to measure the insulation resistance between the cable assembly prongs and ground.

When connection leads are used:

- With the megohmmeter, measure the insulation resistance between each core lead and the ground lead.

Reference insulation resistance: 20MΩ or greater

Note: *The reference insulation resistance (20MΩ or greater) is the value when the pump is new or has been repaired. For the reference value after installation, see "Periodic Maintenance Table."*

Improper ways to measure insulation resistance

1	Between the plug prongs.
2	Between the electrodes on the level relay unit.
3	Between the electrodes on the level relay unit and the plug prongs.

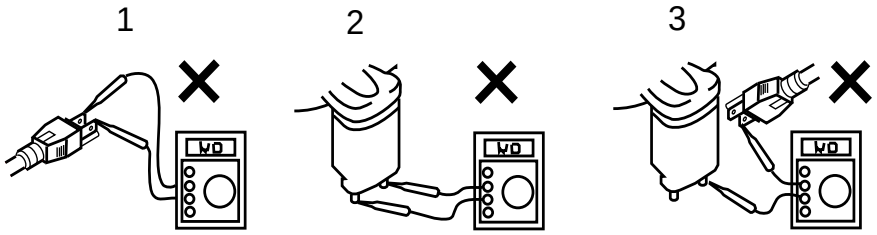

wc_gr000258

3.6 Discharge Fittings

This pump series is offered with a variety of discharge fittings. Follow procedures noted below to assure a proper discharge connection.

Threaded Discharge Fitting (BSP)

Tighten hose coupling or discharge pipe securely and with proper gaskets.

Quick Disconnect Coupling (QD)

Assure coupling is tightened securely to pump discharge fitting and companion coupling is securely fastened with proper gaskets.

Barbed Discharge Fitting (Barb)

Place hose clamp over hose and push hose to the base of the discharge fitting. Tighten the hose clamp to secure the hose in place.

3.7 Electrical Wiring

WARNING
Personal injury hazard. Incorrect wiring can lead to current leakage, electrical shock or fire.
► Electrical wiring should be connected by a qualified person in accordance with all applicable regulations. Failure to observe this precaution not only risks breaking the law but is extremely dangerous.

Always make sure the pump is equipped with the specified overload protectors and fuses or breakers, so as to prevent electrical shock from a current leak or pump malfunction.

Operate within the capacity of the power supply and wiring.

WARNING
Electrical shock hazard. Failure to ground the pump properly can lead to electrical shock from a current leak or pump malfunction.
► Do not attach the grounding wire to a gas pipe, water pipe, lightning arrester or telephone grounding wire.

3.8 Connecting the Power Supply

WARNING

Before connecting leads to the terminal strip, make certain the power supply is turned off (circuit breaker, etc.), to avoid electrical shock, shorting, or unexpected starting of the pump, leading to injury.

Before inserting the power supply plug, make certain the power supply is turned off (circuit breaker, etc.), to avoid electrical shock, shorting, or unexpected starting of the pump, leading to injury.

CAUTION

Do not use the pump with the cable assembly or plug connected loosely, which can result in electric shock, shorting, or fire.

Draw power from a dedicated power outlet rated at 15 A or above. Sharing the outlet with other equipment may cause overheating at the branch outlet and could result in fire.

NOTICE: Be sure to use a dedicated power supply with a ground leakage circuit breaker.

Grounded plug

Connect only to receptacle of proper voltage and current rating matching that of the plug provided with the cable assembly.

Without Plug

Tighten the ends of the cable assembly securely against the terminal board. If installation of a grounded plug is required, use only a properly rated and approved CEE plug and secure the ends of the cable assembly securely to power and ground terminals in accordance with the plug manufacturer's instructions.

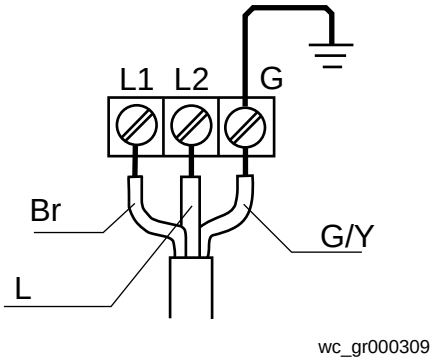

3.9 Cable Assembly

CAUTION

Fire, electrical leakage or electrical shock hazard.

► If it is necessary to extend the cable assembly, use a core size equal to or larger than the original. This is necessary not only to avoid a performance drop, but to prevent cable overheating.

If a cable with cut insulation or other damage is submerged in the water, there is a danger of damage to the pump, electrical leakage, electrical shock, or fire.

Be careful not to let the cable assembly be cut or become twisted. This may result in damage to the pump, electrical leakage, electrical shock, or fire.

If it is necessary to submerge the connection wires of the cable assembly in water, first seal the wires completely in a molded protective sleeve, to prevent electrical leakage, electrical shock, or fire.

Do not allow the cable assembly wires or power supply plug to become wet.

Make sure the cable does not become excessively bent or twisted, and does not rub against a structure in a way that might damage it.

If used in a deep-well installation, the cable assembly should be secured every 6 m (20 ft).

4 Operation

4.1 Before Starting

4.1.1 Make sure once again that the product is of the correct voltage and frequency rating.
***NOTICE*:** Using the product at other than rated voltage and frequency will not only lower its performance but may damage the product.

Note: *Confirm the rated voltage and frequency on the model nameplate.*

4.1.2 Confirm the wiring, supply voltage, circuit breaker capacity, and motor insulation resistance.
Reference insulation resistance = 20 MΩ or greater.

Note: *The reference insulation resistance (20 MΩ or greater) is the value when the pump is new or has been repaired. For the reference value after installation see "Periodic Maintenance Table."*

4.1.3 The setting on the circuit breaker or other overload protector should be made in accord with the rated current of the pump.
Note: *See "Operating Specifications" for the rated current of the pump.*

4.1.4 When powering the pump with a generator, be certain the generator is sized to supply the required power for the pump and any other equipment powered by the generator.

Test Operation

WARNING

Do not operate the pump while it is suspended in the air. The recoil may result in injury or other major accident.

WARNING

Do not start the pump when people are standing next to it. A current leak can result in electrical shock.

Run the pump for a short time (3–10 minutes) and confirm the following:

- Using an ammeter (clamp-on type), measure the operating current at the L1 and L2 phase wires on the terminal.

COUNTERMEASURE: If the operating current exceeds the rated value, pump motor overload may be a cause. Make sure the pump has been installed under proper conditions as described in *Installation*.

- Using an AC voltmeter (tester), measure voltage at the terminals. Supply voltage tolerance: within ±5% of rated voltage.

COUNTERMEASURE: If the supply voltage is outside the tolerance, possible causes are the power supply capacity or an inadequate extension cable. Look again at the wiring diagram and make sure the conditions are proper.

CAUTION

In case of very excessive vibration, unusual noise or odor, turn off the power immediately and consult your nearest dealer or Wacker Neuson representative. Continuing to operate the pump under abnormal conditions may result in electrical shock, fire, or current leakage.

Operation

WARNING

Make sure no extraneous objects such as pins, nails or other metal objects are sucked into the pump. These can damage the pump or cause it to malfunction, and can result in electrical shock or electrical leakage.

When the pump is not used for an extended period, be sure to turn off the power (circuit breaker, etc.). Deterioration of the insulation may lead to electrical leakage, electrical shock, or fire.

In case of a power outage, turn off the power to the pump to avoid having it start unexpectedly when the power is restored, presenting serious danger to people in the vicinity.

CAUTION

The pump may become hot during operation. Do not touch an operating pump. Allow the pump to cool before handling.

Pay careful attention to the water level while the pump is operating. Dry operation may cause the pump to malfunction.

Note: *See section “Operating Water Level” for the water level necessary for operation.*

If the protection system operates due to an overload or malfunction, causing the pump to stop, first investigate and remove the cause before restarting.

4.2 Operating Water Level

CAUTION

Do not operate the pump below the C.W.L. (Continuous running Water Level) indicated below. Failure to observe this condition may result in damage to the pump, current leakage or electrical shock.

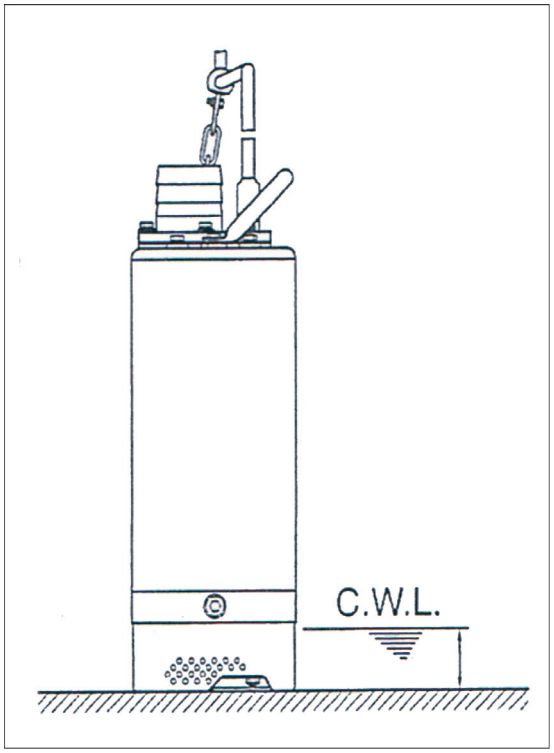

wc_gr007027

Operating Water Level

Pump Model	C.W.L.
PS2 1500	80 mm (3.15 in.)

4.3 Motor Protection System

The pump has a built-in motor protection system. If an excessive current is detected or the motor overheats, for reasons such as the following, the pump will automatically stop operating regardless of the water level, to protect the motor:

- Change in supply voltage polarity
- Overload
- Open-phase operation or operation under constraint

Note: *Always determine the cause of the problem and resolve it before resuming operation. Simply repeating cycles of stopping and restarting will end up damaging the pump. Do not continue operation at very low lift, low water level, or while the strainer stand is clogged with debris. Not only will performance suffer, but also such conditions may cause noise, heavy vibration, and malfunctioning.*

4.4 Emergency Shutdown Procedure

If a breakdown/accident occurs while the machine is operating, follow the procedure below.

4.4.1 Turn off the pump.

4.4.2 Disconnect the power supply.

4.4.3 Contact the rental yard or machine owner.

5 Maintenance

5.1 Periodic Maintenance Schedule

Pump	Weekly	Monthly	Every 1000 hrs.	Every 2000 hrs.
Measure insulation resistance. Reference insulation resistance = 1MΩ or greater. **(1)**	■			
Measure operating current. Compare with rated current.	■			
Measure supply voltage. Compare with allowable range (within ±5% of rated voltage).	■			
Pump inspection. A noticeable drop in performance may indicate wear in the impeller, etc., or else clogging of the strainer, etc. Remove the clogged debris and replace any worn parts.		■		
Lubricant inspection.			■	
Change lubricant.				■
Designated lubricant: SAE 10W/20W. **(2)**				■
Change mechanical seal. **(3)**				■
Overhaul. This should be carried out even if there are no problems with the pump. The frequency depends on how continuously the pump is in use. **(4)**				■

(1) *If the insulation resistance has become noticeably lower than the previous inspection, an inspection of the motor will be necessary.*
(2) *See Inspecting Lubricant and Replacing Lubricant in this section.*
(3) *Specialized know-how is required for inspecting and replacing the mechanical seal. Consult with your nearest dealer or Wacker Neuson representative.*
(4) *Consult with your nearest dealer or Wacker Neuson representative regarding overhauls.*

5.2 Maintenance and Inspection

Regular maintenance and inspections are a necessity for continued efficient functioning of the pump. If any abnormal conditions are noticed, refer to the *Troubleshooting* section and take corrective measures immediately. It is recommended that a spare pump be kept ready in case of any problems.

ADVARSEL
Personal injury hazard from electrical shock or unexpected starting of the pump motor.

► Before inspecting the pump, make certain the power supply (circuit breaker, etc.) is turned off. Then unplug the cable assembly from the receptacle or detach it from the terminals.

5.2.1 Washing the pump

Remove accumulated matter from the surface of the pump and wash it with clean water. Take special care to remove any debris from the impeller.

5.2.2 Inspecting the pump exterior

Look for any peeling or chipped paint, and make sure the nuts and bolts are fastened tightly. Any cracks in the surface should be repaired by cleaning that area, drying it and then applying a touch-up coating.

Note: *Touch-up paint is not supplied. Note that some kinds of damage or looseness may require that the unit be disassembled for repairs. Please consult your nearest dealer or Wacker Neuson representative.*

5.3 Storage

When the pump is out of use for an extended period, wash it and dry it thoroughly, then store it indoors.

Note: *Always run a test operation before putting the pump back into service.*

If the pump is left in the water, it should be run a minimum of once a week.

5.4 Inspecting and Replacing Lubricant

- Inspecting Lubricant

Remove the oil plug and tilt the pump to drain a small amount of lubricant. If the lubricant is milky white or has water mixed in with it, the mechanical seal may be faulty. In this case the pump will need to be disassembled and repaired.

- Replacing Lubricant

Remove the oil plug and drain all the lubricant, then replace it with the specified amount.

Note: *Worn lubricant and other waste products should be disposed of by a qualified agent, in accord with applicable laws. The oil plug gasket should be replaced each time the lubricant is inspected or changed.*

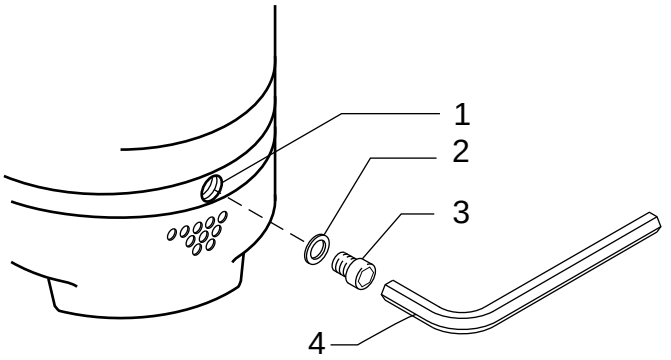

wc_gr001204

Ref.	Description	Ref.	Description
1	Oil inlet	3	Oil plug
2	Gasket	4	Allen wrench

Pump Model	Lubricant Capacity
PS2 1500	370 ml (12.5 fl. oz.)

5.5 Replacement Parts

The table lists the parts that need to be replaced periodically. Replace these using the recommended frequency as a guideline.

Part	Replacement Frequency
Mechanical seal	When lubricant in oil compartment becomes milky.
Lubricant (SAE 10W/20W)	Every 2,000 hours or 12 months, whichever comes first.
Gasket	Each time pump is disassembled or inspected.
Dust seal	When ring is worn, and each time pump is disassembled or inspected.
Sleeve	When it becomes worn.

5.6 Disassembly and Reassembly

Before disassembling the pump, make certain the power supply (circuit breaker, etc.) is turned off. Then, unplug the cable assembly from the receptacle or detach it from the terminals.

ADVARSEL
Electrical shock hazard.
► Do not work with wet hands.

Do not check the operation of any parts (impeller rotation, etc.) by turning on the power while the unit is partially assembled. Failure to observe these precautions may result in a serious accident.

Do not disassemble or repair any parts other than those designated here. If repairs are necessary in any other than the designated parts, consult your nearest dealer or Wacker Neuson representative. Improper repairs can result in electrical leakage, electrical shock, fire, or water leaks.

After reassembly, always perform a test operation before resuming use of the pump. Improper assembly will cause the pump to malfunction, resulting in electric shock or water leaks.

The procedure for disassembly and reassembly is shown here to the extent necessary for impeller replacement. A specialized environment and facilities are necessary for work on the mechanical seal and the motor parts. Contact your nearest dealer or Wacker Neuson representative in the event such repairs are necessary.

5.7 Disassembly

See Graphic: wc_gr005933

5.7.1 Removing the strainer, suction cover, and volute:
Remove the three bolts **(1)** under the strainer **(2)**, then remove the strainer, suction cover **(3)**, and volute **(4)**.

5.7.2 Removing the impeller:
With a box wrench or other tool, remove the acorn nut **(6)**, lockwasher **(7)** and washer **(8)**, then remove the impeller **(9)**, shaft sleeve **(10)** and V-ring **(11)** from the shaft.

5.7.3 Remove the wear plate **(12)** from the oil casing **(13)**.
A worn impeller may have sharp edges that can cause injury, and should be handled with care.

WARNING

Note: *The exploded view shown is for model PS2 800. Other models may differ slightly in shape and structure.*

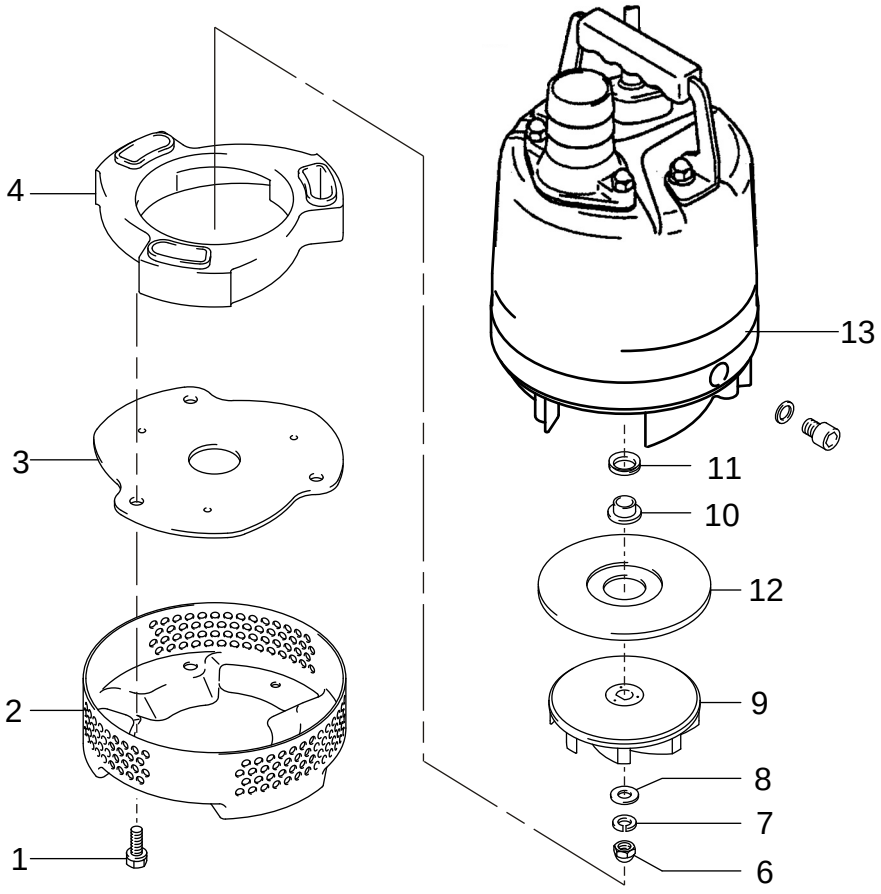

wc_gr005933

5.8 Reassembly

See Graphic: wc_gr005933, wc_gr001205

5.8.1 Mount the V-ring **(11)** onto the outside of the shaft sleeve **(10)** as shown in the drawing. When doing so, do not apply oil or other lubrication to the surface where the V-ring contacts the shaft sleeve **(a)**.

5.8.2 When replacing the wear plate **(12)**, make sure the front and back are oriented correctly. The raised portion should face the oil casing **(13)**. Press the wear plate firmly onto the surface.

5.8.3 Replace the V-ring and shaft sleeve as one piece.

5.8.4 Align the impeller keyway with the rotor shaft keyway and push the impeller **(9)** onto the rotor shaft. Secure the impeller on the shaft with the washer **(8)**, lockwasher **(7)**, and acorn nut **(6)**. While keeping the impeller and shaft from rotating, tighten the acorn nut.

5.8.5 Position volute **(4)** flush with oil housing. Assemble suction cover **(3)** and strainer **(2)** and secure the assembly with the three bolts **(1)**.

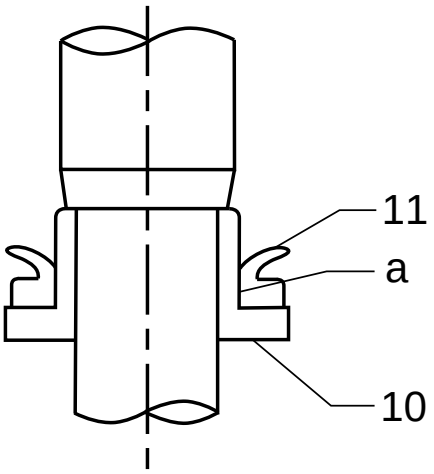

wc_gr001205

5.9 Troubleshooting

WARNING

Before ordering repairs, carefully read through this manual, then repeat the inspection. If the problem remains, contact your nearest dealer or Wacker Neuson representative.

ALWAYS turn off the power before inspecting the pump. Failure to observe this precaution can result in serious accident.

Problem / Symptom	Reason / Remedy
Pump will not start	■ Power is off. Restore power. ■ Cable assembly is cut or not connected properly. Repair/replace the cable or fix the connection. ■ Plug is not inserted. Connect the plug. ■ Impeller is clogged. Inspect the pump and remove any debris. ■ Start float does not operate. Remove any obstruction and check the float operation.
Pump stops soon after starting (Motor protector operates)	■ Impeller is clogged. Remove debris. ■ Low voltage. Provide the rated voltage, or make sure the cable assembly extension is the proper standard. ■ Wrong power frequency. Check the nameplate, and replace the pump or the impeller. ■ Extended operation with a clogged strainer. Remove debris from the strainer. ■ Faulty motor (burning, water infiltration, etc.). Repair or replace the motor. ■ Motor protection system was triggered. Identify and correct cause before re-starting.
Poor lift or discharge capacity	■ Worn out impeller or suction cover. Repair or replace the worn parts. ■ Sharply bent or clogged hose. Straighten out any sharp bends. Enclose the pump with a screen to keep away debris. ■ Strainer clogged or buried. Remove debris from the strainer, or place a block under the pump. ■ Wrong power frequency. Check the nameplate, and replace the pump or the impeller.
Heavy vibration or noise	■ Damaged motor shaft. Contact dealer and replace motor.
Pump will not stop automatically	■ Something is interfering with the float operation, or the float switch is faulty. Remove any obstacles, or replace the switch.

6 Technical Data

6.1 Standard Specifications

Applicable liquids, consistency and temperature	Rain water, fountain water, ground water, sand-carrying water 0–40°C (32–104°F)	
Pump	Impeller	Semi-open type
	Shaft seal	Double mechanical seal
	Bearing	Shielded ball bearing
Motor	Specification	Dry submersible induction motor (2-pole)
	Insulation	Class B
	Protection system	Circle thermal protector
	Lubricant	SAE 10W/20W Such as: –Turbine Oil ISO VG #32 –Shell Victrolia Oil #27 –British Pet Energol THB #32 –Gulf Paramount #32 –Tellus #T22 Shell Oil –Shell Turbo T32
Connection	Storz and hose barb	

6.2 Operating Specifications

Machine		**PS2 1500**
Electric power	V/Ph/Hz	230/1/50
Rated current	A	15.4
Starting method		Capacitor
Discharge	mm (in.)	50 (2)
Output	kW (Hp)	1.5 (2)
Max. discharge head	m (ft.)	17.5 (57.4)
Max. capacity	L/min (GPM)	440 (116)
Max. pressure	kg/cm^2 (psi)	1.79 (25.5)
Solid size capacity	mm (in.)	6 (0.24)
Weight*	Kg (lbs.)	33 (72.8)

*The weight (mass) given above is the operating weight of the pump itself, not including the cable assembly.

6.3 Dimensions

mm (in.)

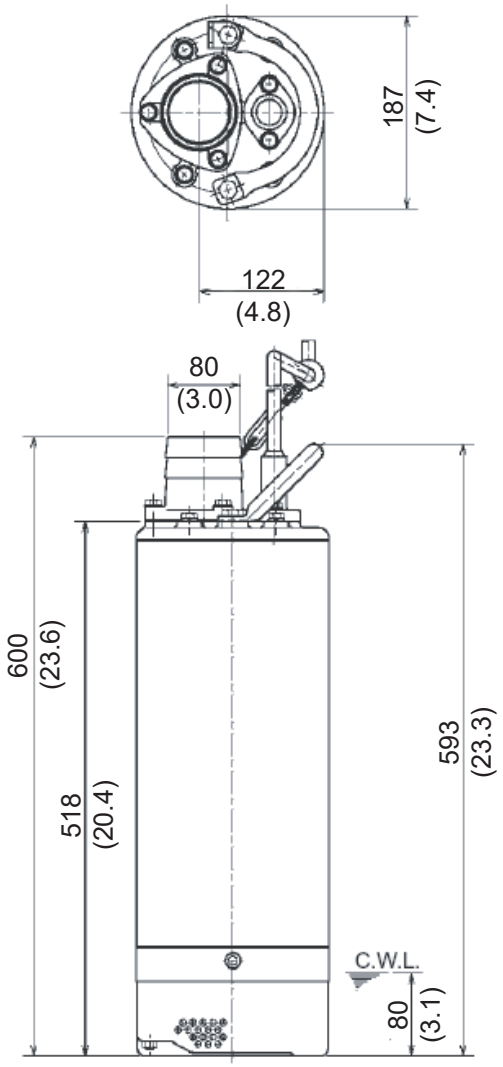

wc_gr007028

This page is intentionally left blank.

PORTABLE PUMPS

www.aem.org

SAFETY MANUAL

FOR OPERATING AND MAINTENANCE PERSONNEL

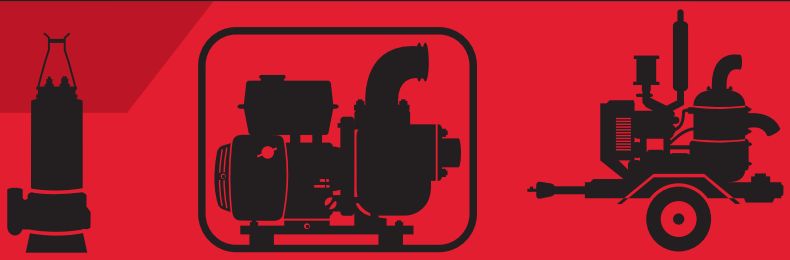

Table of Contents

Acknowledgment....2
Foreword....3
Safety Alerts....4
A Word to the User/Operator....5
Follow a Safety Program....6
Prepare for Safe Operation....10
Start Safely....14
Operate Safely....16
Shut Down Safely....23
Perform Maintenance Safely....24
Final Word to the User....35

Acknowledgment

We wish to thank the members of the Association of Equipment Manufacturers for their invaluable contributions in preparing this Safety Manual.

NOTICE OF COPYRIGHT PROTECTION

Copyright 2015, by the Association of Equipment Manufacturers. All rights reserved. This work may not be reproduced or disseminated in whole or in part by any means without the prior written permission of the Association of Equipment Manufacturers.

ISBN 978-1-937029-37-1

Copyright ©2004–2015 AEM (Association of Equipment Manufacturers)

Revised 12/15

Foreword

This safety manual is intended to point out some common safety situations that may be encountered during the normal operation and maintenance of your pump and to instruct you in safety practices for dealing with these conditions. This manual is **NOT** a substitute for the manufacturer's operating manual(s).

Additional precautions may be necessary, or some instructions may not apply, depending on equipment, attachments and conditions at the job site or in the service area. The manufacturer has no direct control over equipment loading, transportation, unloading, application, operation, inspection or maintenance. Therefore, it is **YOUR** responsibility to use good safety practices in these areas.

The information provided in this manual supplements the specific information about your pump that is contained in the manufacturer's operating manual(s). Other information that may affect the safe operation of your machine may be contained in the following:

- Safety signs, tags, nameplates
- Insurance requirements
- Employer safety and training programs
- Safety codes
- Local, state/provincial, and federal laws, rules, and regulations

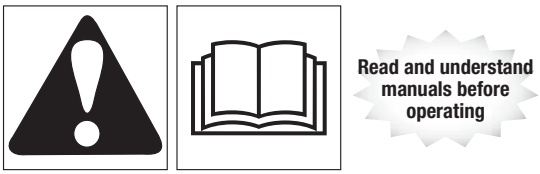

IMPORTANT! Before you operate this machine, make sure you have the manufacturer's manual(s) for this pump and all attachments or accessories. If the manufacturer's manual(s) are missing, obtain replacements from your employer, equipment dealer, or directly from the manufacturer. Keep this safety manual and the manufacturer's manual(s) with the machine at all times. Read and understand all applicable manuals before operating this pump or any other piece of equipment.

Safety videos and other training resources are available from some manufacturers and dealers. Operators are encouraged to periodically review these resources.

Safety Alerts

Safety Alert Symbol

This Safety Alert Symbol means:
"Attention! Stay alert! Your safety is involved!"

The Safety Alert Symbol identifies important safety messages on equipment, safety signs, in manuals, or elsewhere. When you see this symbol, be alert to the possibility of death or personal injury. Carefully read the message that follows and inform other operators. Follow instructions in the safety message.

Signal Words

Signal words are distinctive words that are typically found on safety signs on the portable pumps and other job site equipment. These words may also be found in this manual and the manufacturer's manual(s). These words are intended to alert the operator to a hazard and the degree of severity of the hazard.

DANGER indicates a hazardous situation that, if not avoided, will result in death or serious injury.

WARNING indicates a hazardous situation that, if not avoided, could result in death or serious injury.

CAUTION indicates a hazardous situation that, if not avoided, may result in minor or moderate injury.

NOTICE is used to address practices not related to physical injury.

A Word to the User/Operator

It is **YOUR** responsibility to read and understand this safety manual and the manufacturer's manual(s) before operating this equipment. This safety manual takes you step by step through the working day.

Graphics have been provided to help you understand the text.

Hazard recognition and accident prevention depend upon you being alert, careful, and properly trained in the inspection, operation, transport, maintenance, and storage of this equipment.

Read and understand all safety signs – replace damaged signs

Remember that **YOU** are the key to safety. Good safety practices not only protect you but also protect the people around you. Study this manual and the manufacturer's operating manual(s) for the specific machine. Make them a working part of your safety program. Keep in mind that this safety manual is written only for portable pumps.

After studying the manufacturer's operating manual(s) and this safety manual, please contact the equipment manufacturer with any remaining questions.

Practice all usual and customary safe working precautions and remember:

Safe operation is up to you!

You can prevent death or serious injury caused by unsafe work practices!

Follow a Safety Program

For Safe Operation

You must be a qualified and authorized operator for safe operation of this pump. You must clearly understand the written instructions supplied by the manufacturer, be trained—including actual operation—and know the safety rules and regulations for the job site. It is a good safety practice to point out and explain safety signs and practices to others, and to make sure they understand the importance of following these instructions.

Never operate while impaired by alcohol or drugs

⚠ **WARNING!** Death or serious injury could result from operating machinery while impaired by drugs or alcohol. Drugs and alcohol affect operator alertness, coordination, and the ability to safely operate the equipment. **Never operate the pump while impaired by use of alcohol or drugs. Never knowingly allow anyone to operate the machine when their alertness or coordination is impaired.**

An operator taking prescriptions or over-the-counter medication must consult a medical professional regarding any side effects of the medication that would hinder their ability to safely operate this equipment.

Be Alert!

Know where to get assistance. Keep emergency numbers for doctors, ambulance service, hospital, and fire department near your telephone. Know how to use a first aid kit and fire extinguisher/fire suppression system; know their location and practice getting to them. Ensure they have been properly tested and maintained.

Let others know where you will be working, and what time you will be returning. In case of an emergency, you want others to know where to find you.

Be Aware!

Take advantage of training programs offered.

Know the proper response to a fire or chemical spill involving your pump.

Follow a Safety Program

Be Careful!

Human error is the result of many factors: carelessness, fatigue, sensory overload, preoccupation, unfamiliarity with the machine or attachments, or drugs and alcohol, to name a few. You can avoid death or serious injury caused by these and other unsafe work practices. Be careful; never assume accidents cannot happen to you.

For your safety and the safety of others, act safely and encourage your fellow workers to act safely as well.

Protect Yourself

Wear all the personal protective clothing and Personal Protective Equipment (PPE) issued to you or called for by job conditions.

You may need:

- Hard hat
- Safety shoes
- Safety glasses, goggles, or face shield
- Heavy duty gloves
- Hearing protection
- Reflective clothing
- Wet weather gear
- Respirator or filter mask

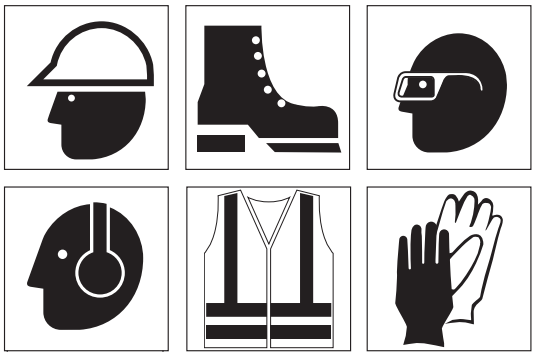

Wear whatever is needed to protect yourself—don't take chances.

⚠ **WARNING!** Avoid death or serious injury from entanglement. **Do not wear loose or frayed clothing or accessories that could catch on moving parts.** Examples of items to avoid include flopping cuffs, dangling neckties and scarves, wallets attached to chains, jewelry and wrist watches.

Follow a Safety Program

Know the Rules

Most job sites have rules governing equipment use and maintenance. Before you start work at a new location, check with the supervisor or safety coordinator. Ask about the rules you will be expected to obey.

OSHA enforces federal laws within the United States that apply to the safe operation, application, and maintenance of equipment on some job sites. It is the employer's responsibility to comply with these laws. A federal representative may periodically inspect a job site to see that these laws are being followed.

There may be other local, state/provincial, federal laws or international organizations that regulate the use of this equipment, along with specific job site or employer rules. It is important that you know and comply with all applicable laws and rules, **including those requiring operator training and certification**.

These are some of the rules you must work by:

- Only qualified and authorized individuals may operate this equipment
- Inspect your machine and attachments before each use as specified by the manufacturer and your employer
- Know the operating characteristics of your equipment. Do not misuse it
- Wear proper clothing and PPE. Check that others are also wearing appropriate clothing
- All shields, guards, air filters, access panels, and doors must be properly installed before each use
- Know the rules regarding traffic at your job site. Know what all signs, flags, and markings mean. Know hand, flag, horn, whistle, siren, or bell signals, if used
- Never modify or remove any part of the machine (except for service; then make sure the part is re-installed or replaced if defective or worn out)

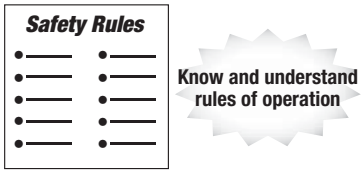

Follow a Safety Program

- **Never allow children to play near, ride on or operate the equipment**
- Keep bystanders well clear of the operation
- Know the work area before you use the equipment. Be aware of possible hazards
- Only use attachments and parts that are approved by the manufacturer
- Follow all safe shutdown instructions (See page 23, **Shut Down Safely**)

Know the Equipment

Read and understand the DANGER, WARNING, CAUTION, and NOTICE safety labels and other informational signs on the machine, the attachments, and in the manufacturer's operating manual(s). Ask your supervisor or dealer to explain any information you do not understand. Failure to obey safety instructions could result in death or serious injury.

Know the following about your equipment:

- Function, purpose, and use of all controls
- Correct operation speeds
- How to quickly stop equipment in an emergency
- Rated operating capacity

Keep in mind that rain, snow, ice, loose gravel, soft ground, slopes, and other site conditions can affect your machine's operating capabilities. Make sure you are thoroughly familiar with your machine's stability, and other handling characteristics under any conditions you are likely to encounter.

Pumps are used in a variety of applications, both indoor and outdoor. Develop a safety program that complies with requirements of your work site and follows the manufacturer's recommendations for safe equipment operation.

Read and understand manual(s) before operating

IMPORTANT: This manual covers safe practices for portable pumps. Do not pump volatile/flammable or caustic/corrosive liquids. If your pump is engine driven, do not operate in the presence of toxic, volatile or explosive gases.

Refer to the owner's manual or consult with the manufacturer for proper pump materials if you are to pump hazardous caustic/corrosive liquids.

Prepare for Safe Operation

Check and Use All Available Safety Devices

To protect you and others around you, your machine may be equipped with the safety equipment listed below. Additional equipment may be required or some items may not apply, depending on attachments used, job site conditions, or applicable job site rules. Check that each required item is securely in place and in operating condition:

- Hard Hat
- Safety Shoes
- Eye Protection
- Respirators
- Heavy Gloves
- Reflector Vests
- Hearing Protection
- Face Protection
- Back Supports
- Fire Extinguisher
- First Aid Kit
- Guards
- Grab Handles
- Special enclosures or accessories required for specific applications or job site conditions
- Safety Signs
- Beacons and/or alarms to indicate automatic starting

Use them! Never remove or disconnect any safety device.

Check the Machine

Before beginning your work day, inspect the machine and have all systems in good operational condition.

Inspect the machine before each work day

- Perform daily and periodic service procedures as instructed by the equipment manufacturer
- Check for broken, missing, loose, or damaged parts. Make necessary repairs
- Keep handholds clean and free of grease, oil, dirt, snow or ice
- Ensure shielding is properly installed and in good condition. Repair or replace if damaged or missing
- Ensure all tools or loose objects are removed or securely fastened while operating the machine

Prepare for Safe Operation

Use Caution When Fueling

⚠ **WARNING!** Avoid injury from fire or explosion. **Never fill the fuel tank with the engine running, while smoking or when near an open flame**.

Never overfill the tank or spill fuel. If fuel is spilled, clean it up immediately.

Be sure to use the correct type and grade of fuel.

Ground the fuel funnel or nozzle against the filler neck to prevent sparks that could ignite fuel vapors. Be sure to replace the fuel fill cap (if equipped) when you are done.

Ultra-Low Sulfur Diesel (ULSD) Fuel Hazard

Avoid Static Electricity Risk When Fueling

⚠ **WARNING!** Ultra-Low Sulfur Diesel (ULSD) poses a greater static ignition hazard than earlier diesel formulations. Avoid death or serious injury from fire or explosion; **consult with your fuel or fuel system supplier to ensure the delivery system is in compliance with fueling standards for proper grounding and bonding practices that are crucial when refueling any vehicle.**

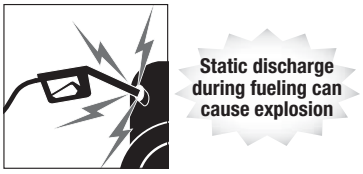

Prepare for Safe Operation

Check the Cooling System

When checking the cooling system, make sure the engine is turned off and is cool. Remove the key to prevent fans from unexpectedly starting. Ensure the coolers and engine compartment are clean and free from debris, which could ignite and cause a fire.

If the machine is air-cooled, be sure the cooling unit has an unobstructed air flow. If it is liquid-cooled, check coolant level (at overflow tank, if provided).

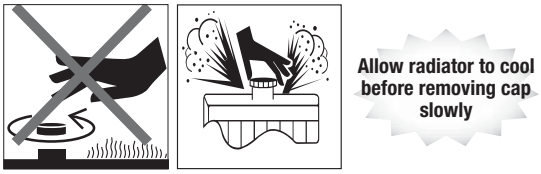

⚠ **WARNING! Allow the radiator to cool before checking the level**. Hot radiator fluids could escape as steam and burn you. (See page 29, **Engine Coolant Hazards.**)

Know the Working Area

Learn as much about your working area as possible.

Check at Ground or Floor Level

Inspect the surface over which you will travel. Look for holes, drop-offs, and obstacles. Look for rough spots or hidden obstacles on surfaces which could cause a collision or loss of control. Look for weak spots on docks, ramps, or floors. Look for oil spills, wet spots, and slippery surfaces. Look for soft soil, deep mud, or standing water. Watch for anything that might make you lose control or cause the machine to roll over.

Ensure that the pump is situated on a firm, flat surface to prevent it from falling down a slope, into a ditch or into the liquid. Also, ensure that you consider the possibility of rising water inundating the pump.

Prepare for Safe Operation

Loading & Transporting Pumps

⚠ **WARNING!** Before loading or unloading any type of pump, make sure to wear all necessary PPE such as steel toed boots, gloves, safety glasses and hard hat.

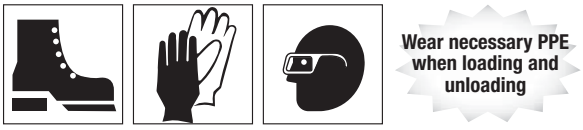

Loading Hauling Pumps

Before unloading and loading hauling pumps, always refer to the manufacturer's operating manual for specific instructions.

When loading and unloading pumps, check for the following:

- Pump hauled on vehicles MUST be securely tied down with approved straps or chains
- When loading the pump, place unit as far forward on the truck bed as possible
- Before hauling the pump in an open-bed truck, walk around the vehicle to assure all fittings on the machine are not over-hanging the truck bed
- Any fitting that is not securely attached to the pump must be removed and secured separately before transport
- Do not lift, load, relocate or unload pumps when section or discharge hoses are attached

Loading Wheel Mounted Pumps

- Check your surroundings while pulling up to the pump with a lift truck
- Stop, lock the brake, turn off the lift, remove the seatbelt and get off the lift
- If applicable, use appropriate tools to loosen, lower, tighten or raise the support stands on trailer-mounted pumps
- Get on the lift truck, fasten the seatbelt, start the lift truck and disengage the parking brake
- Put the lift in forward and drive the forks under the pump being careful not to damage the pump, tires, support legs or anything nearby
- Carefully raise the forks and tilt the pump back slightly until it is approximately 4"-6" inches off the ground and carefully transport as needed
- Check the overall height to ensure compliance with DOT restrictions

Start Safely

Warn Personnel Before Starting

Before starting, walk completely around the machine. **Make sure no one is on it or close to it**. Let others know you are starting up and don't start until everyone is completely clear of the machine. As the equipment operator, you are responsible for the safe use of the machine, so always make sure you have communicated your work plans to others on the site.

Check the pump thoroughly at delivery for any shipping damage.

Locate the pump in an accessible location, as close to the liquid as possible.

Secure the pump after it is placed in its intended operating position so it does not tip, roll, slide or fall.

Starting the Engine

⚠ **WARNING! Never attempt to start the engine by shorting across starter terminals.** Serious injury or death may result.

Know the exact starting procedure for your machine. See the manufacturer's operating manual(s) for starting.

- Familiarize yourself with warning devices, gauges and operating controls
- Make sure controls are in the neutral/locked position
- Clear the area of all persons
- Start the engine following the instructions in the manufacturer's operating manual(s)
- If necessary to run the engine or operate the machine in an enclosed area, ensure there is adequate ventilation

⚠ **WARNING!** Exhaust fumes can kill. **Do not breathe exhaust fumes!**

Start Safely

Starting Aids

If you have trouble starting the engine and need to use jumper cables, follow the instructions in manufacturer's operating manual(s). **Jump-starting is a two-person operation.** The operator must be in the operator's seat when jump-starting so the machine will be under control when the engine starts.

⚠ **WARNING!** Improper jump-starting procedures may cause serious injury or death from a battery explosion or a run-away machine. **Always use proper jump-starting procedure.** (See page 31, **Battery Hazards**.)

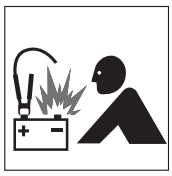

To avoid explosion, follow proper jump-starting procedures

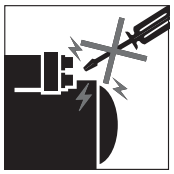

Never start engine by shorting across starter terminals

Ether/cold start fluid is HIGHLY FLAMMABLE. Before using it, always read the instructions on the ether/cold start fluid container and the instructions in the manufacturer's operating manual(s).

⚠ **WARNING!** Avoid injury from explosion or fire. If the engine is equipped with a glow plug pre-heater or other intake manifold type pre-heater, follow manufacturer's instructions before using ether/cold start fluid.

After Starting Engine

Observe gauges, instruments, and warning lights to assure that they are functioning and their readings are within the operating range.

Run an Operating Check

Do not use a machine that is not in proper operating condition. It is your responsibility to check the condition of all systems and to run the check in a safe area.

Operate Safely

Follow Safe Operating Practices

Exhaust Fumes in a Closed Space Can Kill

Vent exhaust and assure a flow of fresh air when an internal combustion engine is used in a closed space.

⚠ **WARNING!** Exhaust fumes from diesel, gasoline or LP gas engines can kill. **Do not breath exhaust fumes from any kind of engine.**

Ventilate work area

Operating in Flammable/Explosive Atmospheres

⚠ **WARNING! A pump cannot be operated in flammable or explosive atmospheres.** Use in explosive atmospheres can result in fires and/or explosions which could cause serious injury or death.

Use only an approved pump with a label designation of G, GS, D, DS, DY, LP, LPS, G/LP, or GS/LPS. See Code of Federal Regulations (OSHA) 29 CFR Part 1910.178 to determine permissible areas where these machines can be operated.

Do not operate in explosive/flammable atmosphere

Operate Safely

Pumps in General

Safe Working Procedures

USE COMMON SENSE! Most accidents can be avoided by using common sense and concentrating on the job to be done.

Only Experienced and Qualified Personnel should install and operate pump equipment.

KNOW THE PROPER starting procedure for your equipment. Follow the manufacturer's operation manual(s) ... to the letter.

DO NOT operate a pump without all guards and shields in place. (If OSHA required guards are damaged or misplaced, contact the manufacturer for a replacement.)

When **lifting pump** use only lifting equipment in good repair and with adequate capacity. Follow manufacturer's lifting recommendation.

Check all lubricant levels before pump installation in accordance with manufacturer's maintenance programs.

Keep hands and feet clear of moving parts. DO NOT stick fingers into a pump when in operation. Check suction strainer and hose regularly for proper submergence and to be sure it is free of obstructions.

NEVER operate a self-priming pump unless the volute is filled with liquid. The pump will not prime when dry.

PUMP only liquids for which the pump has been designed to handle. Verify the hoses and piping have the correct pressure rating for the application.

DO NOT pump flammable, corrosive, hazardous, volatile or caustic materials unless the pump and piping are explicitly designed for that purpose.

NOTE the direction of rotation — operation of a pump in the wrong direction can cause the impeller to unscrew and damage the volute case.

A pump should not be operated against a closed valve or other no flow conditions. Refer to the pump manufacturer's recommended practice for start-up, operation and shut-down procedures. **DO NOT** close down or restrict a discharge hose. **Be careful** of discharge hose whipping under pressure.

Operate Safely

MAKE CERTAIN that whatever is to be connected to the pump is not subjected to pressures greater than those given in the manufacturer's instructions.

MAKE CERTAIN all connections are securely made and hoses under pressure are secured, with appropriate safety devices, to prevent whipping.

BE AWARE OF LIGHTNING. Stay clear of the pumping equipment during electrical storms. It can attract lightning.

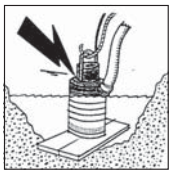

Stay clear of pump during electrical storms

Not for use with potable water unless otherwise stated by the manufacturer.

Overheating Precautions

Overheated pumps can cause severe damage to the equipment and can cause severe physical burns and injury.

Operating a pump with the suction and/or discharge valve closed is a principal cause of overheating. Approach cautiously any pump that has been in operation.

DO NOT remove hoses from a pump until the system is properly cooled to ambient temperature.

DO NOT remove the cover plate or drain plugs from any overheated pump. Allow the pump to cool. Check pump temperature before opening fill port or drain plug.

If overheating of the pump casing occurs:

- STOP the pump immediately
- Allow the Equipment to cool completely
- Slowly and cautiously vent the pump
- Refer to the manufacturer's instruction manual before restarting the unit
- Remove hoses carefully. Heated water can be in hoses and static head produces pressure

Operate Safely

Before Starting

Check the pump thoroughly at delivery for any shipping damage.

Locate the pump in an accessible location, as close to the liquid as possible.

Secure the pump after it is placed in its intended operating position so it does not tip, roll, slide or fall.

Immediately On Starting the Pump

Observe gauges, instruments and warning lights to ensure that they are functioning and their readings are within the normal operating range.

- Be sure the immediate work area is safe for operation
- Operate controls; make certain all operate properly and “feel” right. Accustom yourself to the “feel” of the equipment
- Listen for any unusual noises, smell for any unusual odors; look for any signs of trouble
- Be sure to open all manual valves slowly to prevent WATER HAMMER
- Check all warning and safety devices and indicators
- If safety-related defects or malfunctions are detected, SHUT DOWN the equipment. Correct the problem, or notify your supervisor. DO NOT OPERATE EQUIPMENT WITH DEFECTS OR MALFUNCTIONS UNTIL CORRECTED
- If an unsafe condition cannot be remedied immediately, notify your supervisor and tagout/lockout the pump on the start switch and/or appropriate, prominent location

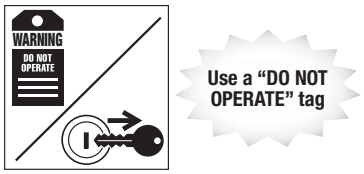

Operate Safely

Engine Driven Pumps

Do not jump start engine battery.

When operating internal combustion engines in an enclosed area, always make provisions to pipe exhaust fumes to the outside.

Exhaust Fumes Can Kill: do not operate engine driven pump equipment in a confined or enclosed space without adequate ventilation.

Exhaust gases are odorless and deadly poison.

DO NOT TOUCH: Exhaust system components get hot and stay hot after shutting the engine off.

Follow engine manufacturer’s instructions explicitly on hand cranking.

Do not shut down high head pumps quickly:

A) Throttle back slowly

B) Open by-pass line

C) Should have a check valve

D) Slowly close gate valve on discharge if so equipped

Check for fuel, oil and hydraulic fluid leaks, worn and damaged hoses/lines or power cables.

Refueling

When refueling, the following precautions must be followed:

- Maintain separate fuel tanks for diesel and gasoline. Keep tanks clean and free of debris
- Add fuel of proper type and grade, only when the pump is not running and engine is cool
- Fuel in well ventilated area
- Turn off all electrical switches
- Keep lighted smoking materials, flames or spark producing devices at a safe distance while refueling
- Keep fuel nozzle in contact with tank being filled, or provide a ground to prevent static sparks from igniting fuel
- **Do not spill fuel on hot surfaces**
- Clean up spillage immediately
- Do not start engine until fuel cap is secured to the fuel tank
- **Always** make sure that fuel is being put in the fuel tank, motor oil in the proper location and hydraulic oil into hydraulic oil reservoirs

Operate Safely

Electric Motor Driven Pumps

Allow only qualified personnel **to INSTALL, WIRE and OPERATE** electric motor driven pumps. Whenever electricity is present there is the possibility of **electrocution**.

NEVER use a pump/motor in an explosive atmosphere if it is not exclusively designed for the application.

Always ground electrical units.

Make certain to connect pump motor to the right phase and voltage.

Do not run pump if voltage is not within limits.

Make sure motor rotation is in accordance with impeller rotation (which should be indicated somewhere on the pump — check the manufacturer's manual).

Make all electrical installations in accordance with National Electric Code, State and Local electrical codes.

Never use gas piping as an electrical ground.

Make sure the related electrical circuits are dead and locked out before performing any maintenance.

Follow motor manufacturer's recommended maintenance and operation instructions.

If circuit breaker or fuse is tripped, examine the system for the problem before restarting pump.

NEVER use the power cord to aid lifting the pump.

NEVER operate a pump with a plug-in type power cord without a ground fault circuit interrupter.

NEVER use cords with frayed, cut or brittle insulation. Check the cord on the pump for nicks in the insulation and for sound connections to the ground fault interrupter plug and motor.

NEVER let extension cords or the plug connections lay in water. Locate the pump so that the cord cannot fall into any water or be submerged by rising water, unless the pump is designed for such use.

NEVER handle energized power cords with wet hands.

MOTOR OVERLOAD: do not exceed the manufacturer's recommendation for maximum lift or discharge head. See manufacturer's published curve for proper sizing of motors. A misapplied motor can overheat.

Operate Safely

Submersibles

Allow only qualified personnel **to INSTALL, WIRE and OPERATE** submersible pumps.

Whenever electricity is present there is the possibility of **electrocution**.

NEVER use a pump/motor in an explosive atmosphere, if it is not exclusively designed for that application.

ALWAYS ground the pump.

Make certain to connect the pump to the right phase and voltage.

DO NOT run the pump if voltage is not within limits. **Make all electrical installations** in accordance with National Electric Code, State and Local electrical codes.

Mount electrical control box in a vertical position, protected from the elements.

NEVER use the power cord or hydraulic hoses to lift or lower submersibles. Attach a lifting cable to the manufacturer's recommended attachment point on the pump for lowering and lifting the pump.

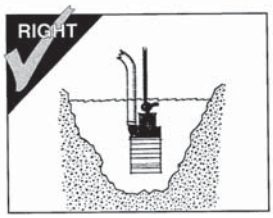

NEVER position the pump directly on a sift, loose bottom. To attain maximum capacity and prevent excessive wear, position the pump so it will not burrow itself into sand or clay. Stand the pump on a plank, a bed of coarse gravel, within a perforated container, on a suitable floatation device, or retain it hanging freely by a lifting cable.

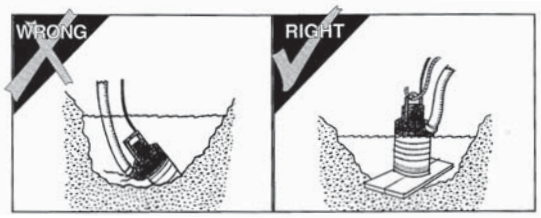

Shut Down Safely

⚠ **WARNING!** Avoid death or serious injury. **Never leave a machine unattended with the engine running**.

Safe Shutdown

The detailed shutdown procedure is given in your manufacturer's manual(s). In general, this includes:

- Stop machine
- Position controls in neutral or locked position
- Idle engine for short cool-down period
- Stop engine and remove ignition key (if equipped)
- Cycle hydraulic controls to eliminate pressure
- Lock covers and enclosures
- Shut off master electric switch (if equipped)

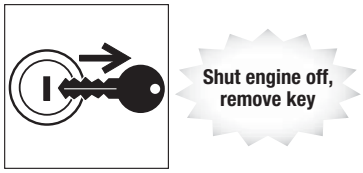

Perform Maintenance Safely

Know What You're Doing

Maintenance on this type of machine is not for inexperienced or untrained personnel. It can be hazardous unless performed properly. Be sure you have the necessary skill, information, correct tools, and proper equipment to do the job safely.

Be sure to maintain the equipment according to the manufacturer's instructions. Regularly check the operation of the protective and safety devices.

Do not perform any work on a machine unless you are authorized and qualified to do so.

If you have been authorized to perform maintenance, **read the manufacturer's operating and service manual(s).** Study the instructions: check the lubrication charts, examine all the instruction messages on the machine.

Protect Yourself

Wear all the personal protective clothing and PPE issued to you or called for by job conditions.

You may need:

- Hard hat
- Safety shoes
- Safety glasses, goggles or face shield
- Heavy duty gloves
- Hearing protection
- Reflective clothing
- Wet weather gear
- Respirator or filter mask

Wear whatever is needed to protect yourself. Do not take chances.

Perform Maintenance Safely

⚠ **WARNING!** Avoid death or serious injury from entanglement. **Do not wear loose clothing or accessories. Stay away from all rotating components when the engine is running.** Contact, wrapping or entanglement with rotating or moving parts could result in death or serious injury.

Wear a rubber apron and rubber gloves when working with corrosives. Wear gloves and safety shoes when handling wooden blocks or sharp-edged metal.

Always use safety glasses, goggles or a face shield. They provide eye protection from fluids under pressure, during grinding and while servicing batteries. Protection is also needed from flying debris, liquids and loose material produced by equipment, tools and pressurized air/water.

Wear a face shield and follow manufacturer's instructions when you disassemble spring-loaded components or work with battery acids. Keep pockets free of all objects that could fall out and drop into machinery.

Handle tools and heavy parts sensibly, with regard for the safety of yourself and others. Lower items; don't drop them.

Avoid rotating parts

Wear eye protection

Do not loosen radiator cap until cool

Perform Maintenance Safely

Prepare the Work Area

- Position the machine in a level area out of the way of other working equipment
- Make sure there is adequate light, ventilation and clearance
- Remove oil, grease or water to eliminate any slippery surfaces
- Clean around the area to be serviced to minimize contamination

Prepare the Machine

Stored energy sources (electrical, mechanical, hydraulic, pneumatic, chemical, thermal, etc.) must be controlled or reduced to a practical minimum before performing any maintenance, repair, or service procedures.

Safety practices to prevent potential injuries from energy-releasing sources include:

- Place controls in NEUTRAL or LOCKED position before shutting off engine
- Allow all moving parts to stop
- Shut off engine
- Relieve hydraulic system pressure by moving controls several times in all directions
- Lock ignition, remove key (if equipped) and take it with you
- Look and listen for evidence of moving parts before servicing
- Shut off master electrical switch (if equipped)
- Securely support or block up machine before working underneath machine or other lifted components
- Securely support, block up, or lock up other components with approved locking devices before working near or underneath them
- Relieve pressure before disconnecting or disassembling any pressurized system
- Block or relieve spring pressure before disassembling any spring-loaded mechanism
- Avoid flames, sparks, or smoking near any fuel, hydraulic fluid or other flammable material such as spraying debris

Avoid falls, clean slippery surfaces

Attach a “DO NOT OPERATE” warning tag to the control levers. Lock out the unit according to the manufacturer’s operating manual. If there is a key, remove it and take it with you.

Install approved support device(s) when working under or near raised equipment.

Remove only guards or covers that provide access to the area being serviced. Replace all guards and covers when work is complete.

⚠ **WARNING!** Avoid injury or death. **Never work on machinery with the engine running unless instructed by the manufacturer’s manual(s) for specific service.**

Pump Maintenance and Repair

MAKE SURE the pump is disconnected from the power source or the appropriate circuits are dead and OSHA Lockout/Tagout is applied before doing any maintenance or repair work on the pump.

Pumps with float switches or other automatic devices can start without warning if not properly locked out.

ALWAYS replace safety devices removed during the service or repair before returning pump to operation.

NEVER use the power cord to aid in lifting the pump.

Sizing Extension Cords

Use the following chart to select the correct size extension cord to prevent excessive amperage draw or voltage drop which would cause the motor to overheat. **Cables that are too long or coiled** can cause a voltage drop. **Be aware** that strong sunlight can cause a voltage drop.

	Wire Gauge and Cord Length (in feet)		
Amperes	**50**	**100**	**150**
6	16	16	14
8	16	14	12
10	16	14	12
12	14	14	12
14	14	12	10
16	12	12	10

Check oil level ONLY when pump is cool.

USE ONLY recommended oil per manufacturer’s recommendation.

INSPECT ELECTRICAL WIRING for worn or damaged insulation. **INSTALL** new wiring if wires are damaged. **After repairs are made, clean the equipment before putting the pump back into position.**

Common Maintenance Safety Practices

Use Proper Ventilation

If it is necessary to run an engine in an enclosed area, remove the exhaust fumes from the area with an exhaust pipe extension.

If you do not have an exhaust pipe extension, make sure you open doors and windows to get plenty of outside air into the area.

⚠ **WARNING!** Exhaust fumes contain carbon monoxide which could be deadly if inhaled. **Never operate any type of engine without proper ventilation.** EXHAUST FUMES CAN KILL.

Fuel Hazards

⚠ **WARNING!** Avoid serious injury or death. **Always use approved fuel containers and/or fuel dispensing equipment to reduce the risk of explosion or fire.**

Always observe these practices to reduce the possibility of a serious accident:

- Shut off engine and ignition during refueling
- Turn off all electrical switches
- Ground the fuel nozzle against the filler neck
- Keep sparks and open flames away from fuel. Do not smoke while refueling or when handling fuel containers
- Do not cut or weld on or near fuel lines, tanks or containers
- Do not overfill the tank or spill fuel. Clean up spilled fuel immediately. Clean spills immediately

Perform Maintenance Safely

Ultra-Low Sulfur Diesel (ULSD) Hazard

⚠ **WARNING!** Ultra-Low Sulfur Diesel (ULSD) poses a greater static ignition hazard than earlier diesel formulations with higher sulfur content. Avoid death or serious injury from fire or explosion; **consult with your fuel or fuel system supplier to ensure the delivery system is in compliance with fueling standards for proper grounding and bonding practices.**

Engine Coolant Hazards

⚠ **WARNING!** Avoid serious injury or death. Liquid cooling systems build up pressure as the engine gets hot, so **use extreme caution before removing the radiator cap.**

- Stop the engine and wait for the system to cool
- Wear protective clothing and safety glasses
- Turn the radiator cap slowly to the first stop to allow the pressure to escape before removing completely

Allow radiator to cool before removing cap slowly

Hydraulic System Hazards

Be sure to follow manufacturer's instructions for relieving fluid pressure before performing any maintenance. The hydraulic system is pressurized whenever the engine is on and may hold pressure even after the engine is shut off. Cycle hydraulic controls, including auxiliary hydraulic control (if equipped), after the engine is shut off.

Check for leaks and inspect hoses

During inspection of the hydraulic system:

- Wait for fluid to cool before disconnecting the lines Hot hydraulic fluid can cause **severe burns**
- Wear appropriate eye protection. Hydraulic fluid can cause permanent eye injury
- When venting or filling the hydraulic system, loosen the filler cap slowly and remove it gradually
- **Never** reset any relief valve in the hydraulic system to a pressure higher than recommended by the manufacturer

Perform Maintenance Safely

Hydraulic Fluid Injection Hazard

⚠ **WARNING!** Accidental injection of high-pressure fluid into the hands or body is dangerous and could result in death or serious injury. **Use caution when checking hydraulic leaks as pressurized hydraulic fluid has enough force to penetrate skin, causing serious personal injury.**

If a leak is discovered:

- Ensure engine is turned off; relieve pressure in hydraulic circuit
- Wear proper hand and eye protection
- Visually examine the hydraulic hoses or fluid lines in the vicinity of the leak for breaks or cracks. **Do not** use your hand to check for leaks
- Repair or replace hydraulic lines according to the manufacturer's recommendations

Fluid injection injuries are not always obvious. Victims have reported such injuries feel like a bee sting or splinter under the skin. If you suspect you have a fluid injection injury, do not take chances. Seek proper medical care immediately. If any fluid is injected into the skin, it must be surgically removed within a few hours by a doctor familiar with this type of injury.

Wear eye protection

High pressure fluid can inject into the body

Perform Maintenance Safely

Battery Hazards

The liquid in batteries contains acid, which is a POISON and could cause SEVERE CHEMICAL BURNS.

Avoid injury:
- Wear a face shield to prevent contact with your eyes
- Wear chemical-resistant gloves and clothing to keep electrolyte off your skin and regular clothing

⚠ **WARNING!** Electrolyte will damage eyes or skin on contact. **Always wear a face shield to avoid electrolyte in eyes.**

If liquid from the battery contacts your eyes, flush immediately with clean water and get medical attention. Wear chemical-resistant gloves and protective clothing to keep liquid off your skin. If liquid contacts exposed skin or clothing, wash off immediately with clean water. If liquid is ingested, drink large quantities of water or milk. DO NOT induce vomiting. Seek medical attention immediately.

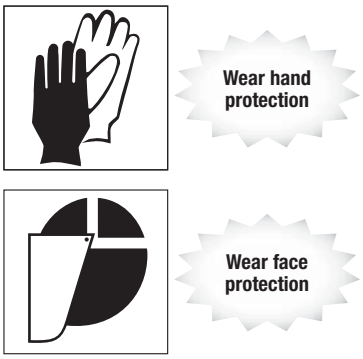

Perform Maintenance Safely

Avoid Explosion

⚠ **WARNING!** Avoid serious injury from explosion. Lead-acid batteries produce extremely explosive gases especially when being charged. **Keep arcs, sparks, flames and lighted tobacco away.**

- **Do not** smoke near batteries
- Keep them away from arcs, sparks and open flames
- Provide adequate ventilation

Never check the battery by placing a metal object across the battery posts. The resulting spark could cause an explosion.

⚠ **WARNING!** Avoid serious injury from battery explosion. **Do not charge a battery or jump-start the engine if the battery is frozen.**

Warm to 60°F (15.5°C) or the battery may explode and could cause serious injury.

Safety rules during battery jump-starting:
- Follow the instructions for proper battery jump-starting, as specified in the manufacturer's manual
- Be sure the machines are not touching
- Observe the polarity of the batteries and connections
- Make the final cable connection to the engine or the furthest ground point away from the battery. Never make the final connection at the starter or dead battery. Sparks may ignite the explosive gases present at the battery
- When disconnecting cables, remove the cables in reverse order of connection (e.g., final connection first)

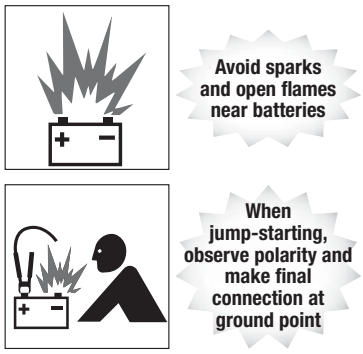

Perform Maintenance Safely

Complete Service and Repairs Before Machine is Released

Tighten all bolts, fittings, and connections to torques specified by the manufacturer.

Are there any missing cotter pins, washers, locknuts, etc.? Are there any parts left over?

High pressure fluid can inject into the body

Start the engine and check for leaks. (See page 29, **Hydraulic System Hazards**.) Operate all controls to make sure the machine is functioning properly. Test the machine if necessary. After testing, shut down and check the work you performed.

Recheck all fluid levels before releasing the equipment for operation.

All parts should be inspected during repair and replaced if worn, cracked or damaged. Excessively worn or damaged parts could fail and cause injury or death.

Install all guards, covers, and shields after servicing. Refill and recharge pressure systems only with manufacturer-approved or recommended fluids.

Verify service work when completed

The information in this safety manual is the consensus of the Contractors Pump Bureau.

Final Word to the User

You have just finished reading the AEM Portable Pumps Safety Manual. It is impossible for this manual to cover every safety situation that you may encounter on a daily basis. Your knowledge of these safety precautions and your application to the basic rules of safety will help to build good judgment in all situations. Our objective is to help you develop, establish, and maintain good safety habits to make operating a portable pump easier and safer for you.

Many pictorials in this safety manual can be downloaded at http://pictorials.aem.org.

For additional publications, visit our website at www.safetymaterials.org.

AEM
ASSOCIATION OF
EQUIPMENT MANUFACTURERS

e-mail safetymaterials@aem.org
www.aem.org

This manual is one in a series on the safe operation of machinery, published by AEM.

ISBN 978-1-937029-37-1
90000>
9 781937 029371

To order AEM safety materials
visit www.safetymaterials.org.

FORM PP-1512

Printed in U.S.A.

8 Schematics

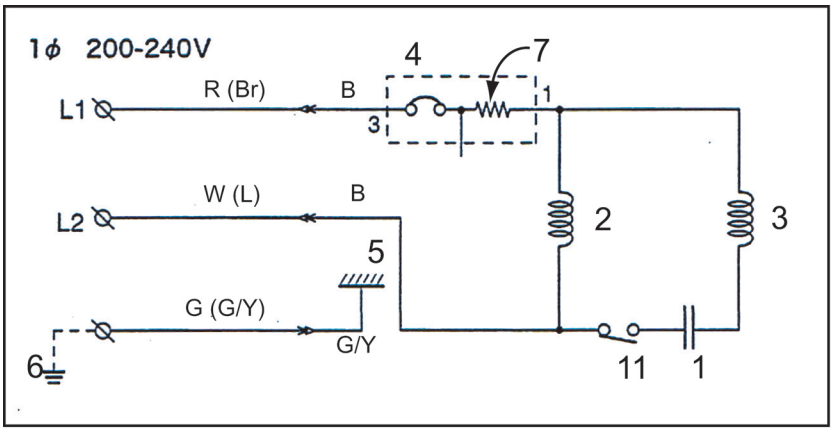

wc_gr007066

NOTICE: If connected to a circuit protected by a fuse, use a time-delay fuse with this pump.

Ref.	Description	Ref.	Description
1	Capacitor	7	Heater
2	Main coil	8	Level relay unit
3	Auxiliary coil	9	Transformer
4	Protector	10	Electrode
5	Frame grounding	11	Switch
6	Ground	—	—

Wire Colors					
B	Black	**V**	Violet	**Or**	Orange
G	Green	**W**	White	**Pr**	Purple
L	Blue	**Y**	Yellow	**Sh**	Shield
P	Pink	**Br**	Brown	**LL**	Light Blue
R	Red	**Cl**	Clear	**G/Y**	Green/Yellow
T	Tan	**Gr**	Gray	**—**	—

This page is intentionally left blank.

EC Declaration of Conformity

Manufacturer

Wacker Neuson America Corporation, N92W15000 Anthony Avenue, Menomonee Falls, Wisconsin, 53051 USA

Product	PST2 400, PST3 750, PS(A)2 500, PS(A)2 800, PS2 1500, PS(A)2 1503L, PS(A)2 2203L, PS2 1503, PS3 1503, PS2 2203, PS3 2203, PS2 3703, PS3 3703, PS4 3703, PS3 5503, PS4 5503, PS4 7503HH, PS4 7503HF, PS4 11003HH, PS4 11003HF
Product Category	Water Pump Units
Product function	To pump fluid
Item Number	5000008802, 5000008803 5000008808, 5000008809, 5000008814, 5000008815, 5000008820, 5000008821, 5000008826, 5000008827, 5000008832, 5000008833, 5000008838, 5000008839, 5000008844, 5000008845, 5000008850, 5000008851, 5000008856, 5000008857, 5000008862, 5000008863, 5000008868, 5000008876, 5000008872, 5000008878, 5000009175, 5000009178, 5000009173, 5000008789, 5000008794, 5000009176, 5000009179, 5000008790, 5000620438, 5000620439, 5000620450, 5000620449, 5000620455, 5000620454, 5000620458, 5000620462, 5000620463, 5000620466, 5000620465

We hereby declare that this product meets and complies with the relevant regulations and requirements of the following directives and standards. The manufacturer bears sole responsibility for issuing this compliance statement.

Conformity Assessment Procedure: RoHS Directive 2011/65/EU

+ (EU)2017/2102

Harmonized Standards: EN 809:1998+A1:2009/AC:2010

Notified Body:

Number: 0197

Name: TUV Rheinland LGA Products GmbH

Address: Tillystrasse 2, 90431 Nuremberg, Germany

Conformity Assessment Procedure: Machinery Directive 2006/42/EC

Harmonized Standards: EN ISO 12100:2010, EN 60204-1:2018, EN 60335-1:2012/A2:2019, EN 60335-2-41:2003/A2:2010, EN 60529:1991/A2:2013

Conformity Assessment Procedure: EMC Directive 2014/30/EU

Harmonized Standards: EN 62233:2008/AC:2008, EN IEC 61000-6-1:2019, EN IEC 61000-6-2:2019, EN 61000-6-3:2007/A1:2011/AC:2012, EN IEC 61000-6-4:2019, EN IEC 63000:2018

Authorized Person for Technical Documents

Wacker Neuson Produktion GmbH & Co. KG, Wackerstraße 6, 85084 Reichertshofen, Germany

Menomonee Falls, WI, USA, 02.02.24

Will Wright

Vice President

Product Engineering and Purchasing

For Wacker Neuson

Original Declaration of Conformity

UK Declaration of Conformity

Manufacturer

Wacker Neuson America Corporation, N92W15000 Anthony Avenue, Menomonee Falls, Wisconsin, 53051 USA

Product	PST2 400, PST3 750, PS(A)2 500, PS(A)2 800, PS2 1500, PS(A)2 1503L, PS(A)2 2203L, PS2 1503, PS3 1503, PS2 2203, PS3 2203, PS2 3703, PS3 3703, PS4 3703, PS3 5503, PS4 5503, PS4 7503HH, PS4 7503HF, PS4 11003HH, PS4 11003HF
Product Category	Water Pump Units
Product function	To pump fluid
Item Number	5000008802, 5000008803 5000008808, 5000008809, 5000008814, 5000008815, 5000008820, 5000008821, 5000008826, 5000008827, 5000008832, 5000008833, 5000008838, 5000008839, 5000008844, 5000008845, 5000008850, 5000008851, 5000008856, 5000008857, 5000008862, 5000008863, 5000008868, 5000008876, 5000008872, 5000008878, 5000009175, 5000009178, 5000009173, 5000008789, 5000008794, 5000009176, 5000009179, 5000008790, 5000620438, 5000620439, 5000620450, 5000620449, 5000620455, 5000620454, 5000620458, 5000620462, 5000620463, 5000620466, 5000620465

We hereby declare that this product meets and complies with the relevant regulations and requirements of the following directives and standards. The manufacturer bears sole responsibility for issuing this compliance statement.

Conformity Assessment Procedure: Restriction of the Use of Certain Hazardous Substances in Electrical and Electronic Equipment Regulations SI 2012 No.3032 + SI 2019 No.492

Harmonized Standards: EN 809:1998+A1:2009/AC:2010

Notified Body: AnP Certification Limited, Issue No.: 8500

2 Parkfield Street, Manchester, M14 4PN

Conformity Assessment Procedure: Supply of Machinery (Safety) Regulations SI 2008 No. 1597

Harmonized Standards: EN ISO 12100:2010, EN 60204-1:2018, EN 60335-1:2012/A2:2019, EN 60335-2-41:2003/A2:2010, EN 60529:1991/A2:2013

Conformity Assessment Procedure: Electromagnetic Compatibility Regulations SI 2016 No. 1091

Harmonized Standards: EN 62233:2008/AC:2008, EN IEC 61000-6-1:2019, EN IEC 61000-6-2:2019, EN 61000-6-3:2007/A1:2011/AC:2012, EN IEC 61000-6-4:2019, EN IEC 63000:2018

Authorized Person for Technical Documents

Manufacturer:

Wacker Neuson America Corporation
N92W15000 Anthony Avenue
Menomonee Falls, Wisconsin, 53051
USA
Menomonee Falls, WI, USA, 02.02.24

Local Contact:

Operations Manager
Wacker Neuson Ltd
WN Place
Beacon Way
Stafford ST18 0DG

Will Wright
Vice President
Product Engineering and Purchasing for Wacker Neuson

Figure of the original Declaration of Conformity

Important: For spare parts information, please see your Wacker Neuson Dealer, or visit the Wacker Neuson website at http://www.wackerneuson.com/.

Wichtig! Informationen über Ersatzteile erhalten Sie von Ihrem Wacker Neuson Händler oder besuchen Sie die Wacker Neuson Website unter http://www.wackerneuson.com/.

Important : Pour des informations sur les pièces détachées, merci de consulter votre distributeur Wacker Neuson, ou de visiter le site Internet de Wacker Neuson sur http://www.wackerneuson.com/.

Importante : Para saber más sobre las piezas de repuesto, póngase en contacto con su distribuidor de Wacker Neuson o acceda al sitio web de Wacker Neuson en http://www.wackerneuson.com/.

Importante : Per informazioni sui pezzi di ricambio, contattare il rivenditore Wacker Neuson o visitare il sito di Wacker Neuson all'indirizzo www.wackerneuson.com.

Viktigt : För information om reservdelar, kontakta din Wacker Neuson-leverantör eller besök Wacker Neusons webbplats på http://www.wackerneuson.com/.

Tärkeää : Pyydä varaosatietoja Wacker Neusonin jälleenmyyjältä tai vieraile Wacker Neusonin web-sivustolla osoitteessa http://www.wackerneuson.com/

Viktig : For informasjon om reservedeler, vennligst kontakt din Wacker Neuson-forhandler, eller besøk Wacker Neusons nettside på http://www.wackerneuson.com/.

Vigtigt : Hvis du ønsker oplysninger om reservedele, bedes du kontakte din Wacker Neuson forhandler eller besøg Wacker Neuson websiden på http://www.wackerneuson.com/.

Belangrijk! Neem contact op met uw Wacker Neuson dealer of bezoek de website van Wacker Neuson op http://www.wackerneuson.com/ voor meer informatie over reserveonderdelen.

Importante : Para obter informações sobre as peças sobresselentes, consulte o seu fornecedor da Wacker Neuson ou aceda ao site Web da Wacker Neuson em http://www.wackerneuson.com

Ważne : W celu uzyskania informacji na temat części zamiennych skontaktuj się z przedstawicielem firmy Wacker Neuson lub skorzystaj z witryny internetowej http://wackerneuson.com/.

Důležité upozornění! Pro informace o náhradních dílech, prosím, kontaktujte svého Wacker Neuson dealera, nebo navštivte webové stránky http://www.wackerneuson.com/.

FONTOS: A pótalkatrészekre vonatkozó információkért kérjük, forduljon Wacker Neuson kereskedőjéhez vagy látogasson el a Wacker Neuson weboldalára a következő címen: http://www.wackerneuson.com/.

Важно! Для ознакомления с информацией о запасных частях, пожалуйста, обратитесь к местному торговому представителю компании Wacker Neuson или посетите веб-сайт http://www.wackerneuson.com/.

Σημαντικό : Για πληροφορίες σχετικά με τα ανταλλακτικά, μιλήστε με τον αντιπρόσωπό σας της Wacker Neuson, ή επισκεφθείτε τον ιστότοπο http://www.wackerneuson.com/.

Važno : Za rezervne dijelove obratite se svom Wacker Neuson prodavaču ili posjetite mrežne stranice tvrtke Wacker Neuson: http://www.wackerneuson.com/.

Önemli : Yedek parça bilgileri için Wacker Neuson Bayinize bakın veya Wacker Neuson web sitesini ziyaret edin. http://www.wackerneuson.com/

重要 交換部品の情報については、ワッカーノイソンディーラーにお問い合わせ頂くか、ワッカーノイソンウェブサイト http://www.wackerneuson.com/ をご覧ください。

重要 有关备件信息，请咨询您的威克诺森经销商或访问威克诺森网站：http://www.wackerneuson.com/。

Important : Pentru informaţii referitoare la piesele de schimb, vă rugăm să vă adresaţi distribuitorului Wacker Neuson sau să vizitaţi site-ul web Wacker Neuson la adresa http://www.wackerneuson.com/.

Важно : За информация относно резервни части, моля, обърнете се към местния дилър на Wacker Neuson или посетете уебсайта на Wacker Neuson на адрес http://www.wackerneuson.com/.

Wacker Neuson Produktion GmbH & Co. KG, Preußenstraße 41, D-80809 München,
Tel.: +49-(0)89-3 54 02-0 Fax: +49 - (0)89-3 54 02-390
Wacker Neuson America Corporation, N92W15000 Anthony Ave., Menomonee Falls, WI. 53051
Tel.: (262) 255-0500 Fax: (262) 255-0550 Tel.: (800) 770-0957
Wacker Neuson Limited - Room 1701–03 & 1717–20, 17/F. Tower 1, Grand Century Place, 193 Prince Edward Road West, Mongkok, Kowloon, Hongkong. Tel: (852) 3605 5360, Fax: (852) 2758 0032