SUN2000-(20KTL, 29.9KTL, 30KTL, 36KTL, 40KTL)-M3 Series

User Manual

Issue	31
Date	2026-09-28

HUAWEI TECHNOLOGIES CO., LTD.

Copyright © Huawei Technologies Co., Ltd. 2026. All rights reserved.

No part of this document may be reproduced or transmitted in any form or by any means without prior written consent of Huawei Technologies Co., Ltd.

Trademarks and Permissions

HUAWEI and other Huawei trademarks are trademarks of Huawei Technologies Co., Ltd.
All other trademarks and trade names mentioned in this document are the property of their respective holders.

Notice

The purchased products, services and features are stipulated by the contract made between Huawei and the customer. All or part of the products, services and features described in this document may not be within the purchase scope or the usage scope. Unless otherwise specified in the contract, all statements, information, and recommendations in this document are provided "AS IS" without warranties, guarantees or representations of any kind, either express or implied.

The information in this document is subject to change without notice. Every effort has been made in the preparation of this document to ensure accuracy of the contents, but all statements, information, and recommendations in this document do not constitute a warranty of any kind, express or implied.

Huawei Technologies Co., Ltd.

Address: Huawei Industrial Base
Bantian, Longgang
Shenzhen 518129
People's Republic of China

Website: https://e.huawei.com

About This Document

Purpose

This document describes the following inverter models (also referred to as SUN2000) in terms of the safety precautions, product introduction, installation, electrical connections, power-on and commissioning, maintenance, and technical specifications. Read this document carefully before installing and operating the inverter.

- SUN2000-20KTL-M3
- SUN2000-20KTL-BRM3
- SUN2000-29.9KTL-M3
- SUN2000-30KTL-M3
- SUN2000-30KTL-BRM3
- SUN2000-36KTL-M3
- SUN2000-40KTL-M3
- SUN2000-40KTL-BRM3

Intended Audience

This document is intended for:

- Installers
- Users

Symbol Conventions

The symbols that may be found in this document are defined as follows.

Symbol	Description
DANGER	Indicates a hazard with a high level of risk which, if not avoided, will result in death or serious injury.
WARNING	Indicates a hazard with a medium level of risk which, if not avoided, could result in death or serious injury.

 Copyright © Huawei Technologies Co., Ltd.

Symbol	Description
CAUTION	Indicates a hazard with a low level of risk which, if not avoided, could result in minor or moderate injury.
NOTICE	Indicates a potentially hazardous situation which, if not avoided, could result in equipment damage, data loss, performance deterioration, or unanticipated results. NOTICE is used to address practices not related to personal injury.
NOTE	Supplements the important information in the main text. NOTE is used to address information not related to personal injury, equipment damage, and environment deterioration.

Change History

Changes between document issues are cumulative. The latest document issue contains all the changes made in earlier issues.

Issue 31 (2026-09-28)

Updated **A Grid Codes**.

Updated **E Resetting a Password**.

Issue 30 (2026-08-28)

Updated **1.3 Environment Requirements**.

Updated **4.3 Determining the Installation Position**.

Issue 29 (2026-06-30)

Added **M Certificate Management and Maintenance**.

Deleted "Rapid Shutdown."

Updated **1.1 Personal Safety**.

Updated **5.2 Preparing Cables**.

Updated **5.5.3 Connecting Cables to Amphenol Helios H4 Terminals**.

Updated **5.5.4 Connecting Cables to Staubli MC4 Terminals**.

Updated **7.3 Alarm Reference**.

Updated **A Grid Codes**.

Issue 28 (2026-04-20)

Updated **5.5.1 Cable Connection Description**.

Updated **5.7.1 Communication Mode Description**.

Updated **9 Technical Specifications**.

Issue 27 (2026-03-30)

Added **6.3 Creating a Plant**.

Deleted 7 "Human-Machine Interaction."

Updated **9 Technical Specifications**.

Updated **H AFCI**.

Updated **J Smart I-V Curve Diagnosis**.

Updated **L Connecting to a Device on the App (the Device Supports WLAN)**.

Issue 26 (2025-11-28)

Updated **A Grid Codes**.

Updated **F Setting Dry Contact Scheduling**.

Issue 25 (2025-09-30)

Updated **5.2 Preparing Cables**.

Updated **5.4 Connecting an AC Output Power Cable**.

Updated **5.7.1 Communication Mode Description**.

Updated the content about SmartLogger networking.

Updated **6.4.2.2 Scenario Where the App Connects to the SmartLogger**.

Updated **9 Technical Specifications**.

Issue 24 (2025-08-22)

Added **5.5.2 Measuring the Insulation Resistance of PV Strings to the Ground**.

Updated **5.4 Connecting an AC Output Power Cable**.

Updated "Rapid Shutdown."

Updated **D NS Protection**.

Updated **G Setting RCD Parameters**.

Issue 23 (2025-07-15)

Updated **5.5 Connecting DC Input Power Cables**.

Issue 22 (2025-03-10)

Updated **A Grid Codes**.

Issue 21 (2025-01-21)

Updated **2.3 Label Description**.

Issue 20 (2024-12-17)

Updated **A Grid Codes**.

Issue 19 (2024-08-20)

Updated **About This Document**.

Updated **1.2 Electrical Safety**.

Updated **2.1 Product Introduction**.

Updated **2.3 Label Description**.

Updated **3 Inverter Storage**.

Updated **4.3 Determining the Installation Position**.

Updated **5.2 Preparing Cables**.

Updated **9 Technical Specifications**.

Updated **A Grid Codes**.

Updated **F Setting Dry Contact Scheduling**.

Updated **G Setting RCD Parameters**.

Issue 18 (2024-03-10)

Added **6.4.2 Setting Feed-in at Limited Current**.

Updated **A Grid Codes**.

Issue 17 (2024-02-02)

Updated **9 Technical Specifications**.

Issue 16 (2024-01-12)

Updated **2.2 Appearance**.

Updated **3 Inverter Storage**.

Updated **4.4 Moving the Inverter**.

Updated **5.1 Precautions**.

Updated **5.2 Preparing Cables**.

Updated **5.4 Connecting an AC Output Power Cable**.

Updated **5.5.1 Cable Connection Description**.

Updated **7.3 Alarm Reference**.

Updated **9 Technical Specifications**.

Updated **A Grid Codes**.

Updated **N Contact Information**.

Added **O Digital Power Customer Service**.

Issue 15 (2023-11-08)

Updated **4.3 Determining the Installation Position**.

Updated **5.3 Connecting the PE Cable**.

Updated **5.7.1 Communication Mode Description**.

Updated "Human-Machine Interaction."

Updated **9 Technical Specifications**.

Issue 14 (2023-09-20)

Updated **5.5.1 Cable Connection Description**.

Issue 13 (2023-04-28)

Updated **A Grid Codes**.

Added **K Locating Insulation Resistance Faults**.

Updated **N Contact Information**.

Issue 12 (2023-02-28)

Updated **2.1 Product Introduction**.

Updated **5.2 Preparing Cables**.

Updated **5.6 (Optional) Installing the Smart Dongle**.

Updated **9 Technical Specifications**.

Issue 11 (2023-01-10)

Updated **1 Safety Information**.

Updated **2.3 Label Description**.

Updated **4.2 Tools**.

Updated "Human-Machine Interaction."

Updated **7.3 Alarm Reference**.

Updated **9 Technical Specifications**.

Added **N Contact Information**.

Issue 10 (2022-09-26)

Updated **5.2 Preparing Cables**.

Updated **5.4 Connecting an AC Output Power Cable**.

Issue 09 (2022-06-30)

Updated **5.2 Preparing Cables**.

Updated **5.4 Connecting an AC Output Power Cable**.

Updated **5.5 Connecting DC Input Power Cables**.

Updated **5.7.1 Communication Mode Description**.

Updated "Human-Machine Interaction."

Updated the content about SmartLogger networking.

Updated **7.3 Alarm Reference**.

Updated **9 Technical Specifications**.

Added **I PV String Access Detection**.

Issue 08 (2022-04-14)

Updated **5.2 Preparing Cables**.

Updated **5.7.1 Communication Mode Description**.

Updated **G Setting RCD Parameters**.

Issue 07 (2022-01-30)

Updated **4.3 Determining the Installation Position**.

Updated **7.2 Routine Maintenance**.

Issue 06 (2022-01-04)

Updated **5.2 Preparing Cables**.

Updated the content about creating a plant and an owner account.

Updated **6.4.1 Grid-tied Point Control**.

Updated **6.4.3 Apparent Power Control on the Inverter Output Side**.

Updated **9 Technical Specifications**.

Updated **A Grid Codes**.

Issue 05 (2021-11-25)

Updated **5.4 Connecting an AC Output Power Cable**.

Issue 04 (2021-07-25)

Updated **5.2 Preparing Cables**.

Updated **9 Technical Specifications**.

Issue 03 (2021-04-15)

Updated **2.1 Product Introduction**.

Updated **5.2 Preparing Cables**.

Updated **5.5 Connecting DC Input Power Cables**.

Updated **9 Technical Specifications**.

Issue 02 (2020-11-20)

Updated **2.3 Label Description**.

Updated **4.3 Determining the Installation Position**.

Updated **5.2 Preparing Cables**.

Updated **5.7.1 Communication Mode Description**.

Updated **9 Technical Specifications**.

Issue 01 (2020-10-15)

This issue is the first official release.

Contents

About This Document ii

1 Safety Information 1

1.1 Personal Safety 2

1.2 Electrical Safety 4

1.3 Environment Requirements 7

1.4 Mechanical Safety 9

2 Overview 14

2.1 Product Introduction 14

2.2 Appearance 16

2.3 Label Description 17

2.4 Working Principles 20

2.4.1 Circuit Diagram 20

2.4.2 Working Modes 20

3 Inverter Storage 23

4 Installation 25

4.1 Check Before Installation 25

4.2 Tools 26

4.3 Determining the Installation Position 27

4.4 Moving the Inverter 32

4.5 Installing the Mounting Bracket 33

4.5.1 Support Mounting 34

4.5.2 Wall Mounting 35

4.6 Installing the Inverter 36

5 Electrical Connections 39

5.1 Precautions 39

5.2 Preparing Cables 40

5.3 Connecting the PE Cable 43

5.4 Connecting an AC Output Power Cable 45

5.5 Connecting DC Input Power Cables 52

5.5.1 Cable Connection Description 53

5.5.2 Measuring the Insulation Resistance of PV Strings to the Ground 55

 Copyright © Huawei Technologies Co., Ltd.

5.5.2.1 Optimizers Configured 55
5.5.2.2 Optimizers Not Configured 58
5.5.3 Connecting Cables to Amphenol Helios H4 Terminals 60
5.5.4 Connecting Cables to Staubli MC4 Terminals 62
5.6 (Optional) Installing the Smart Dongle 64
5.7 Connecting Signal Cables 66
5.7.1 Communication Mode Description 69
5.7.2 (Optional) Connecting the RS485 Communications Cables to the Inverter 72
5.7.3 (Optional) Connecting the RS485 Communications Cable to the Power Meter 73
5.7.4 (Optional) Connecting the Power Grid Scheduling Signal Cable 74
5.7.5 (Optional) Connecting the Rapid Shutdown Signal Cable 75

6 Commissioning 77
6.1 Checking Before Power-On 77
6.2 System Power-On 78
6.3 Creating a Plant 80
6.3.1 Downloading and Installing the App 80
6.3.2 Registering an Installer Account 80
6.3.3 Quick Settings 81
6.3.4 Creating a Plant 84
6.3.5 Registering an Owner Account 84
6.4 Setting Function and Feature Parameters 84
6.4.1 Grid-tied Point Control 84
6.4.2 Setting Feed-in at Limited Current 88
6.4.2.1 Connecting the App to the Inverter or Smart Dongle 88
6.4.2.2 Scenario Where the App Connects to the SmartLogger 90
6.4.3 Apparent Power Control on the Inverter Output Side 93

7 System Maintenance 95
7.1 System Power-Off 95
7.2 Routine Maintenance 96
7.3 Alarm Reference 97

8 Inverter Handling 99
8.1 Removing the SUN2000 99
8.2 Packing the SUN2000 99
8.3 Disposing of the SUN2000 99

9 Technical Specifications 100

A Grid Codes 112

B Device Commissioning 135

C Built-in PID Recovery 138

D NS Protection 140

E Resetting a Password ... 141
E.1 Power-On and Power-Off ... 141
E.2 Resetting the Password After Connecting to the Device and Obtaining the Verification Code ... 142
E.3 Resetting the Password After Obtaining the Verification Code and Connecting to the Device ... 144
E.4 Resetting the Password on the SmartLogger WebUI ... 146
F Setting Dry Contact Scheduling ... 148
G Setting RCD Parameters ... 150
H AFCI ... 152
I PV String Access Detection ... 154
J Smart I-V Curve Diagnosis ... 157
K Locating Insulation Resistance Faults ... 158
L Connecting to a Device on the App (the Device Supports WLAN) ... 162
M Certificate Management and Maintenance ... 165
M.1 Initial Certificate Risk Disclaimer ... 165
M.2 Application Scenarios of Initial Certificates ... 166
M.3 Updating a Certificate ... 166
M.4 Querying the Validity Period of the Identity Certificate ... 167
N Contact Information ... 168
O Digital Power Customer Service ... 170
P Acronyms and Abbreviations ... 171

1 Safety Information

Statement

Before transporting, storing, installing, operating, using, and/or maintaining the equipment, read this document, strictly follow the instructions provided herein, and follow all the safety instructions on the equipment and in this document. In this document, "equipment" refers to the products, software, components, spare parts, and/or services related to this document; "the Company" refers to the manufacturer (producer), seller, and/or service provider of the equipment; "you" refers to the entity that transports, stores, installs, operates, uses, and/or maintains the equipment.

The **DANGER**, **WARNING**, **CAUTION**, and **NOTICE** statements described in this document do not cover all the safety precautions. You also need to comply with relevant international, national, or regional standards and industry practices. **The Company shall not be liable for any consequences that may arise due to violations of safety requirements or safety standards concerning the design, production, and usage of the equipment.**

The equipment shall be used in an environment that meets the design specifications. Otherwise, the equipment may be faulty, malfunctioning, or damaged, which is not covered under the warranty. The Company shall not be liable for any property loss, personal injury, or even death caused thereby.

Comply with applicable laws, regulations, standards, and specifications during transportation, storage, installation, operation, use, and maintenance.

Do not perform reverse engineering, decompilation, disassembly, adaptation, implantation, or other derivative operations on the equipment software. Do not study the internal implementation logic of the equipment, obtain the source code of the equipment software, violate intellectual property rights, or disclose any of the performance test results of the equipment software.

The Company shall not be liable for any of the following circumstances or their consequences:

- Equipment damage due to force majeure such as earthquakes, floods, volcanic eruptions, debris flows, lightning strikes, fires, wars, armed conflicts, typhoons, hurricanes, tornadoes, and other extreme weather conditions
- Operation beyond the conditions specified in this document

 Copyright © Huawei Technologies Co., Ltd.

- Installation or use in environments that do not comply with international, national, or regional standards
- Installation or use by unqualified personnel
- Failure to follow the operation instructions or safety precautions on the product or in this document
- Unauthorized modifications to the product or software code or removal of the product
- Damage caused during transportation by you or a third party authorized by you
- Storage conditions that do not meet the requirements specified in this document
- Failure to comply with local laws, regulations, or related standards due to the materials and tools prepared by you
- Damage caused by your or a third party's negligence, intentional breach, gross negligence, or improper operations or damage not caused by the Company

1.1 Personal Safety

DANGER

Ensure that power is off during installation. Do not install or remove a cable with power on. Transient contact between the core of the cable and the conductor will generate electric arcs or sparks, which may cause a fire or personal injury.

DANGER

Non-standard and improper operations on the energized equipment may cause fire, electric shocks, or explosion, resulting in property damage, personal injury, or even death.

DANGER

Before operations, remove conductive objects such as watches, bracelets, bangles, rings, and necklaces to prevent electric shocks.

DANGER

During operations, use dedicated insulated tools to prevent electric shocks or short circuits. The dielectric withstanding voltage level must comply with local laws, regulations, standards, and specifications.

 Copyright © Huawei Technologies Co., Ltd.

DANGER

In rare fault scenarios, flammable gas mixtures may be generated inside the product. In this condition, operating a switch may cause the product to catch fire or allow a serious fault to propagate.

WARNING

During operations, wear personal protective equipment such as protective clothing, insulated shoes, goggles, safety helmets, and insulated gloves.

Figure 1-1 Personal protective equipment

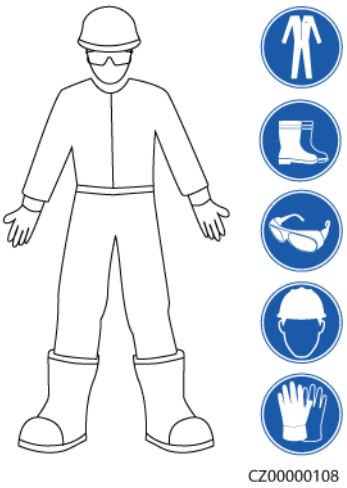

General Requirements

- Do not stop protective devices. Pay attention to the warnings, cautions, and related precautionary measures in this document and on the equipment.
- If there is a likelihood of personal injury or equipment damage during operations, immediately stop, report the case to the supervisor, and take feasible protective measures.
- Do not power on the equipment before it is installed or confirmed by professionals.
- Do not touch the power supply equipment directly or with conductors such as damp objects. Before touching any conductor surface or terminal, measure the voltage at the contact point to ensure that there is no risk of electric shock.
- Do not touch operating equipment because the enclosure is hot.
- Do not touch a running fan with your hands, components, screws, tools, or boards. Otherwise, personal injury or equipment damage may occur.
- In the case of a fire, immediately leave the building or the equipment area and activate the fire alarm or call emergency services. Do not enter the affected building or equipment area under any circumstances.

 Copyright © Huawei Technologies Co., Ltd.

Personnel Requirements

- Only professionals and trained personnel are allowed to operate the equipment.
  - Professionals: personnel who are familiar with the working principles and structure of the equipment, trained or experienced in equipment operations, and fully aware of the sources and degree of various potential hazards in equipment installation, operation, maintenance
  - Trained personnel: personnel who are trained in technology and safety, have required experience, are aware of possible hazards on themselves in certain operations, and are able to take protective measures to minimize the hazards on themselves and other people
- Personnel who plan to install or maintain the equipment must receive adequate training, be able to correctly perform all operations, and understand all necessary safety precautions and local relevant standards.
- Only qualified professionals or trained personnel are allowed to install, operate, and maintain the equipment.
- Only qualified professionals are allowed to remove safety facilities and inspect the equipment.
- Personnel who will perform special tasks such as electrical operations, working at heights, and operations of special equipment must possess the required local qualifications.
- Only authorized professionals are allowed to replace the equipment or components (including software).
- Only personnel who need to work on the equipment are allowed to access the equipment.

1.2 Electrical Safety

DANGER

Before connecting cables, ensure that the equipment is intact. Otherwise, electric shocks or fires may occur.

DANGER

Non-standard and improper operations may result in fire or electric shocks.

DANGER

Prevent foreign matter from entering the equipment during operations. Otherwise, short circuits, equipment damage, load power derating, power failure, or personal injury may occur.

 Copyright © Huawei Technologies Co., Ltd.

WARNING

For the equipment that needs to be grounded, install the ground cable first when installing the equipment and remove the ground cable last when removing the equipment.

WARNING

During the installation of PV strings and the inverter, the positive or negative terminals of PV strings may be short-circuited to ground if the power cables are not properly installed or routed. In this case, an AC or DC short circuit may occur and damage the inverter. The resulting device damage is not covered under any warranty.

CAUTION

Do not route cables near the air intake or exhaust vents of the equipment.

CAUTION

The components (such as power distribution boxes, circuit breakers, and cables) used for electrical connections shall comply with fire resistance and flame retardance standards (such as IEC 60670-1). The materials and structure shall meet fire safety requirements.

General Requirements

- Follow the procedures described in the document for installation, operation, and maintenance. Do not modify, retrofit, or alter the equipment without authorization (including, but not limited to, adding or removing components and cables), and do not change the installation sequence.
- Obtain approval from the national or local electric utility company before connecting the equipment to the grid.
- Observe the power plant safety regulations, such as the operation and work ticket mechanisms.
- Install temporary fences or warning ropes and hang "No Entry" signs around the operation area to keep unauthorized personnel away from the area.
- Before installing or removing power cables, turn off the switches of the equipment and its upstream and downstream switches.
- Before performing operations on the equipment, check that all tools meet the requirements and record the tools. After the operations are complete, collect all of the tools to prevent them from being left inside the equipment.
- Before installing power cables, check that cable labels are correct and cable terminals are insulated.

 Copyright © Huawei Technologies Co., Ltd.

- When installing the equipment, use a torque tool of a proper measurement range to tighten the screws. When using a wrench to tighten the screws, ensure that the wrench does not tilt and the torque error does not exceed 10% of the specified value.
- Ensure that bolts are tightened with a torque tool and marked in red and blue after double-check. Installation personnel mark tightened bolts in blue. Quality inspection personnel confirm that the bolts are tightened and then mark them in red. (The marks must cross the edges of the bolts.)

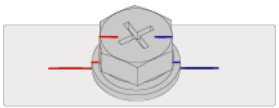

- If the equipment has multiple inputs, disconnect all the inputs and wait until the equipment is completely powered off before performing operations on the equipment.
- Before maintaining a downstream electrical or power distribution device, turn off the output switch on the power supply equipment.
- During equipment maintenance, attach "No switching on" labels near the upstream and downstream switches or circuit breakers as well as warning signs to prevent accidental connection. The equipment can be powered on only after troubleshooting is complete.
- Do not open equipment panels.
- Check equipment connections periodically, ensuring that all screws are securely tightened.
- Only qualified professionals can replace a damaged cable.
- Do not scrawl, damage, or block any labels or nameplates on the equipment. Promptly replace labels that have worn out.
- Do not use solvents such as water, alcohol, or oil to clean electrical components inside or outside of the equipment.
- The surge protection of the PV system and the building where the PV system is installed shall comply with local standards.

Grounding

- Ensure that the grounding impedance of the equipment complies with local electrical standards.
- Ensure that the equipment is connected permanently to the protective ground. Before operating the equipment, check its electrical connection to ensure that it is reliably grounded.
- Do not operate the equipment in the absence of a properly installed ground conductor.
- Do not damage the ground conductor.

Cabling Requirements

- When selecting, installing, and routing cables, follow local safety regulations and rules.
- When routing power cables, ensure that there is no coiling or twisting. Do not join or weld power cables. If necessary, use a longer cable.

- Ensure that all cables are properly connected and insulated, and meet specifications.
- Ensure that the cables are protected from mechanical stress, overheating, and corrosion.
- Ensure that cables are not squeezed, torn, warped, or whitened.
- Ensure that the slots and holes for routing cables are free from sharp edges, and that the positions where cables are routed through pipes or cable holes are equipped with cushion materials to prevent the cables from being damaged by sharp edges or burrs.
- Ensure that cables of the same type are bound together neatly and straight and that the cable sheath is intact. When routing cables of different types, ensure that they are away from each other without entanglement and overlapping.
- Secure buried cables using cable supports and cable clips. Ensure that the cables in the backfill area are in close contact with the ground to prevent cable deformation or damage during backfilling.
- If the external conditions (such as the cable layout or ambient temperature) change, verify the cable usage in accordance with the IEC-60364-5-52 or local laws and regulations. For example, check that the current-carrying capacity meets requirements.
- When routing cables, reserve at least 30 mm clearance between the cables and heat-generating components or areas. This prevents deterioration or damage to the cable insulation layer.

1.3 Environment Requirements

DANGER

Do not expose the equipment to flammable or explosive gas or smoke. Do not perform any operation on the equipment in such environments.

DANGER

Do not store any flammable or explosive materials in the equipment area.

DANGER

Do not place the equipment near heat sources or fire sources, such as smoke, candles, heaters, or other heating devices. Overheating may damage the equipment or cause a fire.

 Copyright © Huawei Technologies Co., Ltd.

WARNING

Install the equipment in an area far away from liquids. Do not install it under areas prone to condensation, such as under water pipes and air exhaust vents, or areas prone to water leakage, such as air conditioner vents, ventilation vents, or feeder windows of the equipment room. Ensure that no liquid enters the equipment to prevent faults or short circuits.

WARNING

To prevent damage or fire due to high temperature, ensure that the ventilation vents or heat dissipation systems are not obstructed or covered by other objects while the equipment is running.

General Requirements

- Store the equipment according to the storage requirements. Equipment damage caused by unqualified storage conditions is not covered under the warranty.
- Keep the installation and operating environments of the equipment within the allowed ranges. Otherwise, its performance and safety will be compromised.
- The operating temperature range provided in the equipment's technical specifications refers to the ambient temperatures in equipment's installation environment.
- Do not install, use, or operate outdoor equipment and cables (including but not limited to moving equipment, operating equipment and cables, inserting connectors to or removing connectors from signal ports connected to outdoor facilities, working at heights, performing outdoor installation, and opening doors) in harsh weather conditions such as lightning, rain, snow, and level 6 or stronger wind.
- Do not install the equipment in an environment with dust, smoke, volatile or corrosive gases, infrared and other radiations, organic solvents, or salty air.
- Do not install the equipment in an environment with conductive metal or magnetic dust.
- Do not install the equipment in an area conducive to the growth of microorganisms such as fungus or mildew.
- Do not install the equipment in an area with strong vibration, noise, or electromagnetic interference. The equipment shall be installed in an environment with a magnetic field strength less than 4 Gauss. If the magnetic field strength is greater than or equal to 4 Gauss, the equipment may fail to work properly. If the magnetic field strength is high, for example, in a smeltery, you are advised to use a gauss meter to measure the magnetic field strength of the equipment installation position when the smelting equipment is running normally.
- Ensure that the site complies with local laws, regulations, and related standards.
- Ensure that the ground in the installation environment is solid, free from spongy or soft soil, and not prone to subsidence. The site must not be located

 Copyright © Huawei Technologies Co., Ltd.

in a low-lying land prone to water or snow accumulation, and the horizontal level of the site must be above the highest water level of that area in history.

- Do not install the equipment in a position that may be submerged in water.
- If the equipment is installed in a place with abundant vegetation, in addition to routine weeding, harden the ground underneath the equipment using cement or gravel (the area shall be greater than or equal to 3 m x 2.5 m).
- Do not install the equipment in salt-affected areas because it may be corroded. If the equipment has to be installed in a salt-affected area, consult the Company. A salt-affected area refers to the region within 500 m of the coast or prone to sea breeze. Regions prone to sea breeze vary with weather conditions (such as typhoons and monsoons) or terrains (such as dams and hills).
- Before opening doors during the installation, operation, and maintenance of the equipment, clean up any water, ice, snow, or other foreign objects on the top of the equipment to prevent foreign objects from falling into the equipment.
- When installing the equipment, ensure that the installation surface is solid enough to bear the weight of the equipment.
- After installing the equipment, remove the packing materials such as cartons, foam, plastics, and cable ties from the equipment area.

1.4 Mechanical Safety

WARNING

Ensure that all necessary tools are ready and inspected by a professional organization. Do not use tools that have signs of scratches or fail to pass the inspection or whose inspection validity period has expired. Ensure that the tools are secure and not overloaded.

WARNING

Do not drill holes into the equipment. Doing so may affect the sealing performance and electromagnetic containment of the equipment and damage components or cables inside. Metal shavings from drilling may short-circuit boards inside the equipment.

General Requirements

- Repaint any paint scratches caused during equipment transportation or installation in a timely manner. Equipment with scratches must not be exposed for an extended period of time.
- Do not perform operations such as arc welding and cutting on the equipment without evaluation by the Company.
- Do not install other devices on the top of the equipment without evaluation by the Company.

 Copyright © Huawei Technologies Co., Ltd.

- When performing operations over the top of the equipment, take measures to protect the equipment against damage.
- Use correct tools and operate them in the correct way.

Moving Heavy Objects

- Be cautious to prevent injury when moving heavy objects.

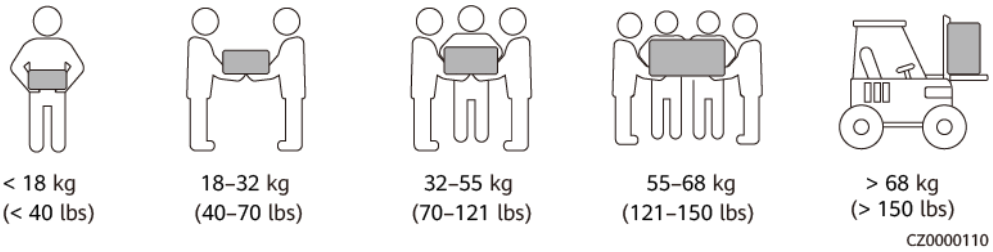

- If multiple persons need to move a heavy object together, determine the manpower and work division with consideration of height and other conditions to ensure that the weight is equally distributed.
- If two persons or more move a heavy object together, ensure that the object is lifted and landed simultaneously and moved at a uniform pace under the supervision of one person.
- Wear personal protective gears such as protective gloves and shoes when manually moving the equipment.
- To move an object by hand, approach to the object, squat down, and then lift the object gently and stably by the force of the legs instead of your back. Do not lift it suddenly or turn your body around.
- Do not quickly lift a heavy object above your waist. Place the object on a workbench that is half-waist high or any other appropriate place, adjust the positions of your palms, and then lift it.
- Move a heavy object stably with balanced force at an even and low speed. Put down the object stably and slowly to prevent any collision or drop from scratching the surface of the equipment or damaging the components and cables.
- When moving a heavy object, be aware of the workbench, slope, staircase, and slippery places. When moving a heavy object through a door, ensure that the door is wide enough to move the object and avoid bumping or injury.
- When transferring a heavy object, move your feet instead of turning your waist around. When lifting and transferring a heavy object, ensure that your feet point to the target direction of movement.
- When transporting the equipment using a pallet truck or forklift, ensure that the tynes are properly positioned so that the equipment does not topple. Before moving the equipment, secure it to the pallet truck or forklift using ropes. When moving the equipment, assign dedicated personnel to take care of it.
- Choose sea, roads in good conditions, or airplanes for transportation. Do not transport the equipment by railway. Avoid tilt or jolt during transportation.

Using Ladders

- Use wooden or insulated ladders when you need to perform live-line working at heights.

 Copyright © Huawei Technologies Co., Ltd.

- Platform ladders with protective rails are preferred. Single ladders are not recommended.
- Before using a ladder, check that it is intact and confirm its load bearing capacity. Do not overload it.
- Ensure that the ladder is securely positioned and held firm.

- When climbing up the ladder, keep your body stable and your center of gravity between the side rails, and do not overreach to the sides.
- When a step ladder is used, ensure that the pull ropes are secured.
- If a single ladder is used, the recommended angle for the ladder against the floor is 75 degrees, as shown in the following figure. A square can be used to measure the angle.

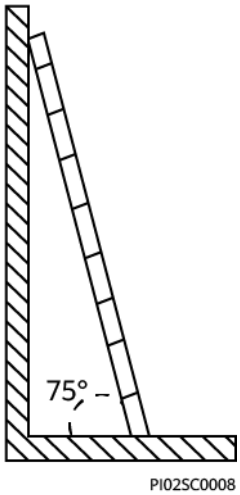

- If a single ladder is used, ensure that the wider end of the ladder is at the bottom, and take protective measures to prevent the ladder from sliding.
- If a single ladder is used, do not climb higher than the fourth rung of the ladder from the top.
- If you use a single ladder to climb up to a platform, ensure that the ladder is at least 1 m higher than the platform.

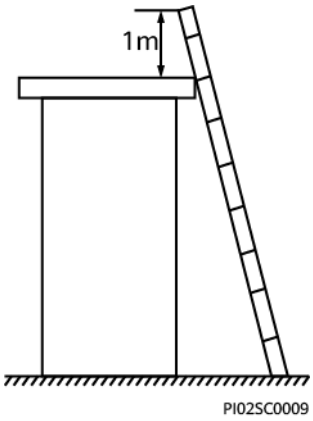

Hoisting

- Only trained and qualified personnel are allowed to perform hoisting operations.
- Install temporary warning signs or fences to isolate the hoisting area.
- Ensure that the foundation where hoisting is performed meets the load-bearing requirements.
- Before hoisting objects, ensure that hoisting tools are firmly secured onto a fixed object or wall that meets the load-bearing requirements.
- During hoisting, do not stand or walk under the crane or the hoisted objects.
- Do not drag steel ropes and hoisting tools or bump the hoisted objects against hard objects during hoisting.
- Ensure that the angle between two hoisting ropes is no more than 90 degrees, as shown in the following figure.

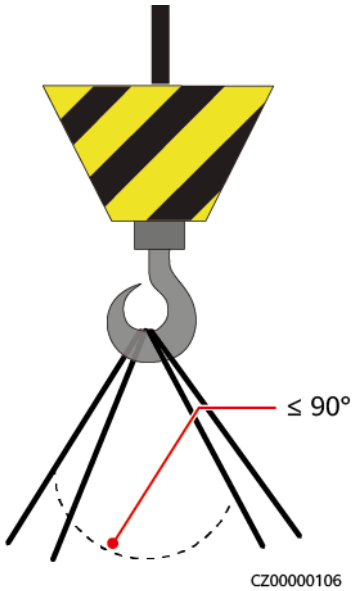

Drilling Holes

- Obtain consent from the customer and contractor before drilling holes.
- Wear protective equipment such as safety goggles and protective gloves when drilling holes.

- To avoid short circuits or other risks, do not drill holes into buried pipes or cables.
- When drilling holes, protect the equipment from shavings. After drilling, clean up any shavings.

 Copyright © Huawei Technologies Co., Ltd.

2 Overview

2.1 Product Introduction

Function

The SUN2000 is a three-phase grid-tied PV string inverter that converts the DC power generated by PV strings into AC power and feeds the power into the power grid.

Model

This document involves the following product models:

- SUN2000-20KTL-M3
- SUN2000-20KTL-BRM3
- SUN2000-29.9KTL-M3
- SUN2000-30KTL-M3
- SUN2000-30KTL-BRM3
- SUN2000-36KTL-M3
- SUN2000-40KTL-M3
- SUN2000-40KTL-BRM3

NOTE

The SUN2000-20KTL-M3 and SUN2000-20KTL-BRM3 support 220 V (line voltage) power grids.

Figure 2-1 Model number (using SUN2000-30KTL-M3 as an example)

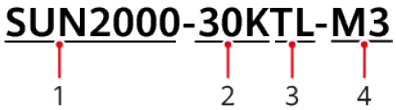

Table 2-1 Model description

No.	Meaning	Description
1	Product family identifier	SUN2000: grid-tied solar inverter
2	Power level identifier	• 20K: The rated power is 20 kW. • 29.9K: The rated power is 29.9 kW • 30K: The rated power is 30 kW. • 36K: The rated power is 36 kW. • 40K: The rated power is 40 kW.
3	Topology identifier	TL: transformerless
4	Product series identifier	M3: product series with an input voltage level of 1100 V DC[a]
5	Region identifier	BR: Brazil

Note a: The maximum DC input voltage for the SUN2000-20KTL-M3 and SUN2000-20KTL-BRM3 is 800 V. For details, see **9 Technical Specifications**.

Networking Application

The SUN2000 applies to grid-tied systems for commercial and industrial (C&I) rooftop projects and small-sized ground-mounted plants. The system consists of PV strings, grid-tied inverters, AC switches, and power distribution units (PDUs).

Figure 2-2 Networking application – single inverter scenario

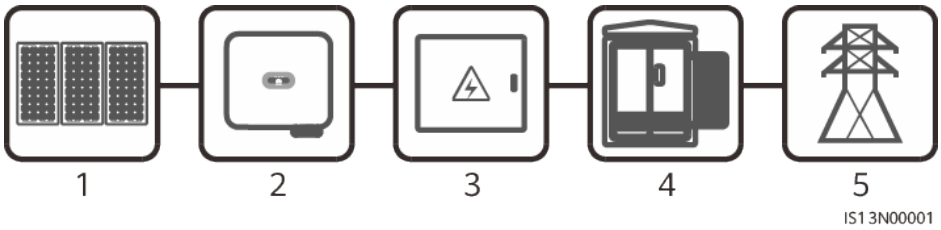

(1) PV string (2) SUN2000 (3) AC PDU

(4) Isolation transformer (5) Power grid

Supported Earthing Systems

The SUN2000 supports the TN-S, TN-C, TN-C-S, TT, and IT earthing systems.

 Copyright © Huawei Technologies Co., Ltd.

Figure 2-3 Earthing systems

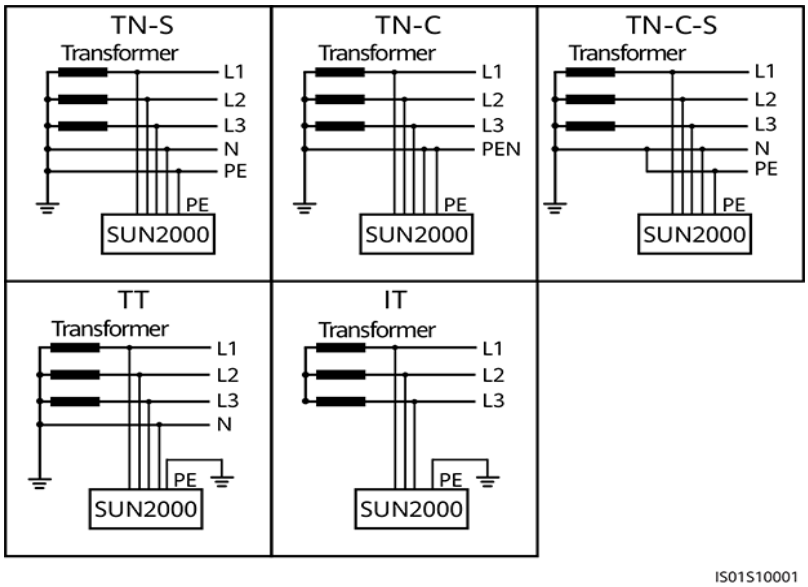

2.2 Appearance

Figure 2-4 Appearance

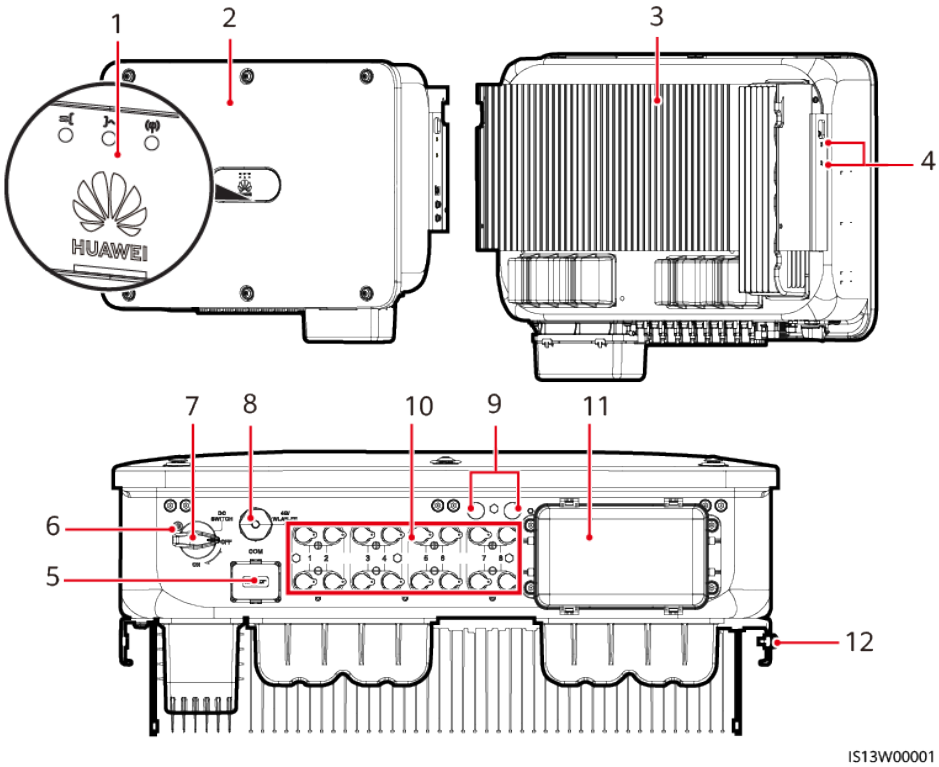

(1) LED indicators

(2) Front panel

(3) Heat sink

(4) Screw holes for fixing the sunshade

(5) Communications port (COM)

(6) Hole for the DC switch locking screw

(7) DC switch (DC SWITCH)

(8) Smart Dongle port (4G/WLAN-FE)

(9) Ventilation valves

(10) DC input terminals (PV1–PV8)

(11) AC output ports

(12) Ground point

2.3 Label Description

Symbol	Name	Meaning
	Delayed discharge	• High voltage exists after the inverter is powered on. Only qualified and trained electrical technicians are allowed to perform operations on the inverter. • Residual voltage exists after the inverter is powered off. It takes 5 minutes for the inverter to discharge to a safe voltage.
	High temperature hazard	Do not touch the inverter when it is running because its enclosure is hot.

 Copyright © Huawei Technologies Co., Ltd.

Symbol	Name	Meaning
	Electric shock warning	• High voltage exists after the inverter is powered on. Only qualified and trained electrical technicians are allowed to perform operations on the inverter. • High touch current exists after the inverter is powered on. Before powering on the inverter, ensure that it is properly grounded.
	Refer to documentation	Reminds operators to refer to the documentation provided with the device. Losses caused by operations that do not comply with the requirements of site selection, storage, or mounting specified in the user manual are not covered under the warranty.
	Protective earthing	Indicates the position for connecting the protective earthing (PE) cable.
	Operation warning	Do not remove the DC input connector or AC output connector with power on.
	Device weight	The inverter is heavy and must be carried by three persons.

Symbol	Name	Meaning
	Inverter handle burn warning	Do not touch the handles until 10 minutes after the inverter is shut down.
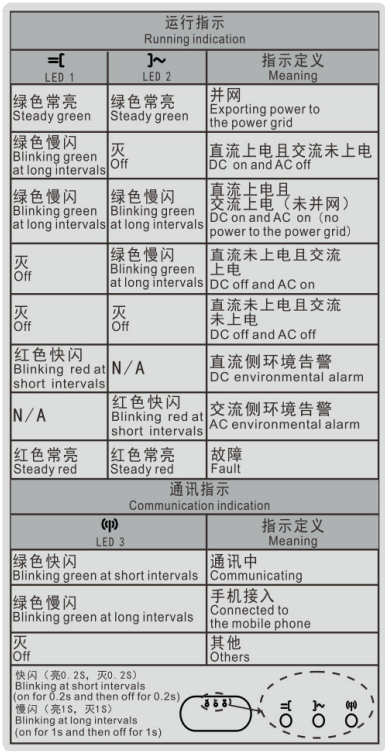	Indicators	Indicates the inverter operating information.
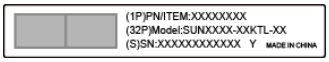	Inverter SN	Indicates the inverter serial number.

Symbol	Name	Meaning
WLAN SSID: SUN2000-XXXXXXXXXX Password:XXXXXXXX	QR code for inverter WLAN connection	Scan the QR code to connect to the inverter WLAN.

2.4 Working Principles

2.4.1 Circuit Diagram

The SUN2000 receives inputs from eight PV strings. Then the inputs are grouped into four MPPT circuits inside the SUN2000, with each MPPT circuit tracking the maximum power point of two PV strings. The DC power is then converted into three-phase AC power through an inverter circuit. Surge protection is supported on both the DC and AC sides.

Figure 2-5 Schematic diagram

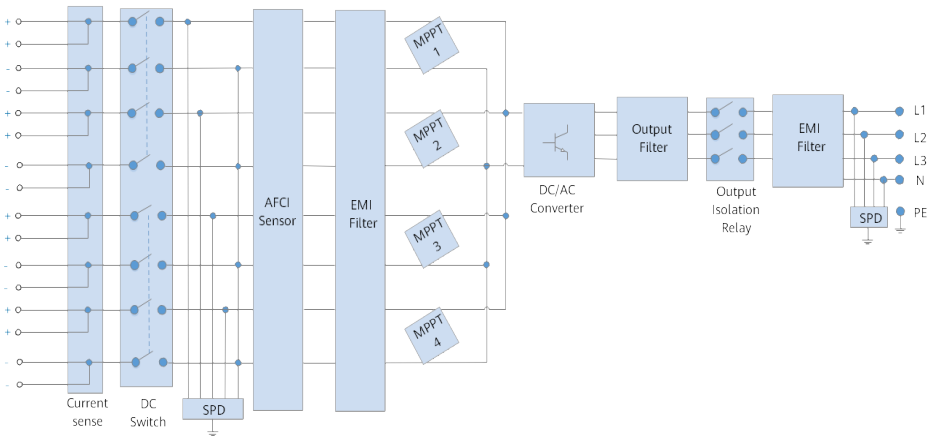

2.4.2 Working Modes

The SUN2000 has three working modes: standby, operating, and shutdown.

Figure 2-6 Working modes

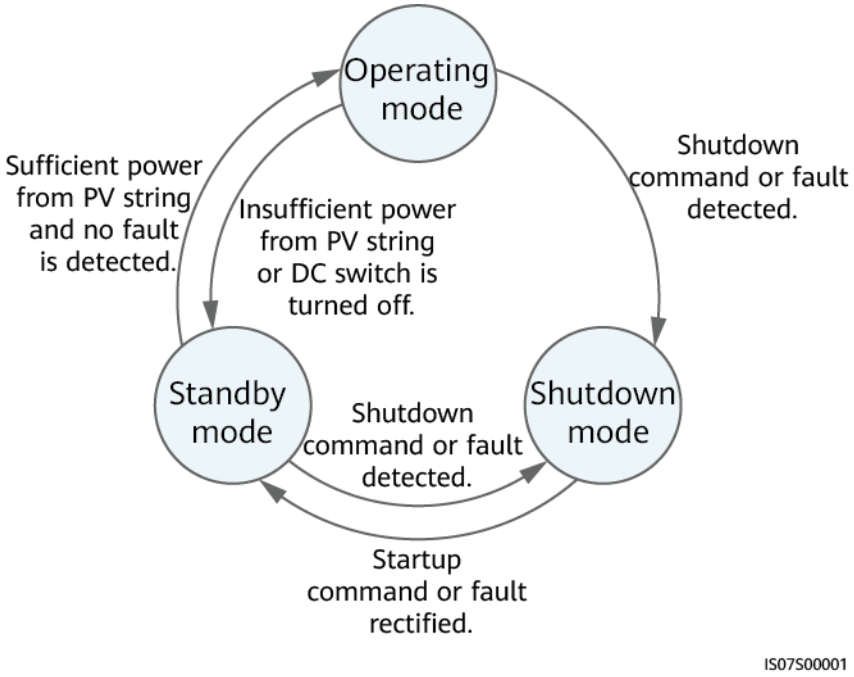

Table 2-2 Working mode description

Working Mode	Description
Standby	The inverter enters the standby mode when the external environment does not meet the operating requirements. In the standby mode: ● The inverter continuously detects its operation status. Once the operation conditions are met, the inverter enters the operating mode. ● If the inverter receives a shutdown command or detects a fault after startup, it enters the shutdown mode.
Operating	In the operating mode: ● The inverter converts DC power received from PV strings into AC power and then feeds the power to the power grid. ● The inverter tracks the maximum power point to maximize the PV string output power. ● If the inverter receives a shutdown command or detects a fault, it enters the shutdown mode. ● If the inverter detects that the output power of PV strings does not meet the requirements for grid-tied power generation, it enters the standby mode.

 Copyright © Huawei Technologies Co., Ltd.

Working Mode	Description
Shutdown	• In the standby or operating mode, if the inverter receives a shutdown command or detects a fault, it enters the shutdown mode. • In the shutdown mode, if the inverter detects that the fault is rectified or receives a startup command, it enters the standby mode.

 Copyright © Huawei Technologies Co., Ltd.

3 Inverter Storage

NOTICE

- Store devices according to the storage requirements. Device damage caused by unqualified storage conditions is not covered under the warranty.
- Do not store the devices without outer packaging.

The following requirements shall be met if inverters are not put into use immediately:

- Do not remove the outer packaging. Check the packaging regularly (recommended: once every three months). Replace any packaging that is damaged during storage.
- If an inverter is unpacked but will not be used immediately, put it back to the original packaging with the desiccant, and seal it with tape.
- Inverters must be stored in a clean and dry environment with appropriate temperature and humidity. The air must not contain corrosive or flammable gases.

Figure 3-1 Storage temperature and humidity

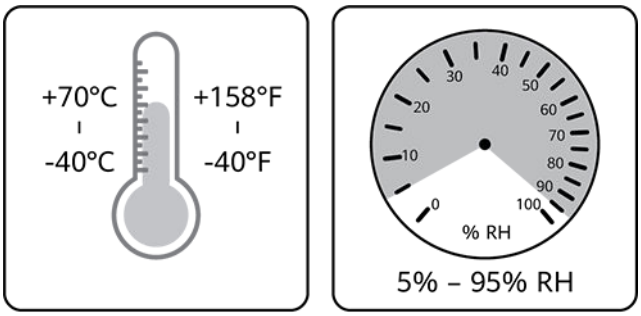

IS07W00011

- When temporarily storing inverters outdoors, do not stack them on a pallet. Take rainproof measures such as using tarpaulins to protect inverters from rain and water.
- Do not tilt a packing case or place it upside down.
- To avoid personal injury or device damage, stack inverters with caution to prevent them from falling over.

 Copyright © Huawei Technologies Co., Ltd.

Figure 3-2 Maximum number of stacking layers (In the figure, N indicates the maximum number of stacking layers.)

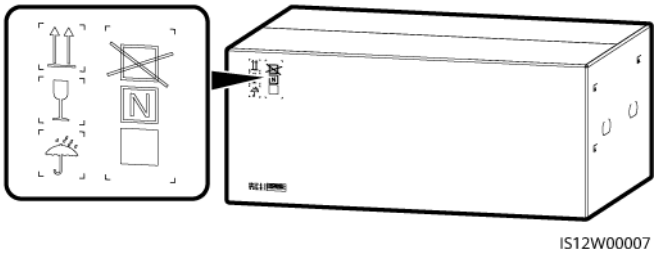

- Do not store inverters for more than two years. If inverters have been stored for two years or longer, they must be checked and tested by professionals before being put into use.
- If an inverter has not been running for six months or longer after being mounted, it may have failed and must be checked and tested by professionals before being put into operation.

4 Installation

4.1 Check Before Installation

Checking Outer Packing

Before unpacking the inverter, check the outer packing for damage, such as holes and cracks, and check the inverter model. If any damage is found or the inverter model is not what you requested, do not unpack the device and contact your vendor as soon as possible.

NOTE

You are advised to remove the outer packaging within 24 hours before installing the inverter.

Checking Deliverables

NOTICE

- After placing the equipment in the installation position, unpack it with care to prevent scratches. Keep the equipment stable during unpacking.

- After unpacking the inverter, check that the deliverables are intact and complete. If any item is missing or damaged, contact your vendor.
- Do not step on or sit on the inverter. The Company will not be held responsible for any resulting damage or deformation to the inverter.

NOTE

For details about the quantity of deliverables, see the *Packing List* in the packing case.

 Copyright © Huawei Technologies Co., Ltd.

4.2 Tools

Type	Tools and Instruments		
Installation	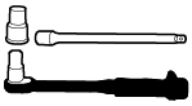 Insulated torque socket wrench (including an extension bar)	Insulated torque socket wrench (including an extension socket)	Phillips insulated torque screwdriver
	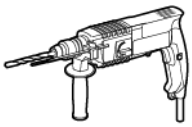 Hammer drill	Hammer drill bit	Rubber mallet
	Utility knife	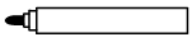 Marker	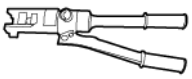 Hydraulic pliers
	Cable cutter	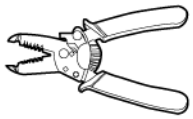 Wire stripper	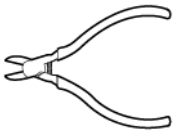 Diagonal pliers
	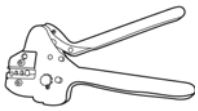 Crimping tool H4TC0003 (Amphenol)	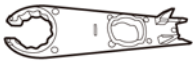 Open-end wrench H4TW0001 (Amphenol)	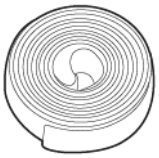 Heat shrink tubing

 Copyright © Huawei Technologies Co., Ltd.

Type	Tools and Instruments		
	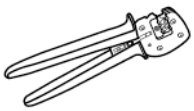 Crimping tool (model: PV-CZM-22100)	Open-end wrench (model: PV-MS-HZ or PV-MS)	Heat gun
	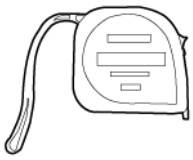 Steel measuring tape	Level	Multimeter
	Cable tie	Vacuum cleaner	-
Personal protective equipment (PPE)	Goggles	Protective shoes	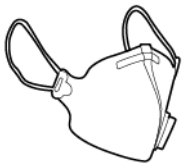 Dust mask
	Protective gloves	Insulated gloves	-

4.3 Determining the Installation Position

Installation Environment Requirements

- Keep the inverter out of reach of children.
- The inverter is protected to IP66 and can be installed indoors or outdoors.

 Copyright © Huawei Technologies Co., Ltd.

- Do not install the inverter in working or living areas to avoid personal injury or property loss caused by accidental contact by non-professionals or other reasons during device operation.
- Do not install the inverter in noise-sensitive areas (such as residential areas, office areas, and schools) to avoid complaints. If the preceding areas are unavoidable, the distance between the installation position and noise-sensitive areas must be greater than 40 m. Alternatively, use other low-noise models.
- If the device is installed in public places (such as parking lots, stations, and factories) other than working and living areas, install a protective net outside the device and set up a safety warning sign to isolate the device. This is to avoid personal injury or property loss caused by accidental contact by non-professionals or other reasons during device operation.
- If the equipment is installed in a place with abundant vegetation, in addition to routine weeding, harden the ground underneath the equipment using cement or gravel (the area shall be greater than or equal to 3 m x 2.5 m).
- Do not install the equipment in an area with strong vibration, noise, or electromagnetic interference. The equipment shall be installed in an environment with a magnetic field strength less than 4 Gauss. If the magnetic field strength is greater than or equal to 4 Gauss, the equipment may fail to work properly. If the magnetic field strength is high, for example, in a smeltery, you are advised to use a gauss meter to measure the magnetic field strength of the equipment installation position when the smelting equipment is running normally.
- Do not install the inverter in areas containing flammable materials (such as sulfur, phosphorus, liquefied petroleum gas, marsh gas, flour, and cotton) to avoid personal injury or property loss caused by fire or other reasons.
- Do not install the inverter in areas containing explosives (such as blasting agents, display shells, fireworks, and firecrackers) to avoid personal injury or property loss caused by explosion or other reasons.
- Do not install the inverter in areas with corrosive substances (such as sulfuric acid, hydrochloric acid, nitric acid, hydrogen sulfide, and chlorine) to avoid inverter failure caused by corrosion, which is not covered under the warranty.
- Avoid installing inverters in easily accessible locations, as they operate at a high voltage and their enclosures and heat sinks become hot during use.
- The inverter provides self-protection in high-temperature environments. Its energy yield may decrease as the ambient temperature increases. Ensure that the following installation requirements are met:
  - Install the inverter in a well-ventilated environment to ensure good heat dissipation.
  - If the inverter is installed in an enclosed environment, the heat dissipation equipment or ventilation equipment shall be installed. The indoor ambient temperature must not be higher than the outdoor ambient temperature.
  - You are advised to install the device in a sheltered place or install an awning over it to avoid direct sunlight.
  - Reserve sufficient clearance around the inverter for installation and heat dissipation.

 Copyright © Huawei Technologies Co., Ltd.

- Do not install the equipment in salt-affected areas because it may be corroded. If the equipment has to be installed in a salt-affected area, consult the Company. A salt-affected area refers to the region within 500 m of the coast or prone to sea breeze. Regions prone to sea breeze vary with weather conditions (such as typhoons and monsoons) or terrains (such as dams and hills).

NOTE

The inverter shall be physically separated from residential environments or radio receivers by distance greater than 30 m.

CAUTION

The SUN2000-20KTL-BRM3, SUN2000-30KTL-BRM3, and SUN2000-40KTL-BRM3 shall be installed in compliance with the technical standards for PV electrical installation (NBR 16690) and the technical standards for PV system fire risk management (IEC 63226).

Mounting Structure Requirements

- The mounting structure for the inverter must be fireproof. Do not install the inverter on flammable building materials to avoid personal injury or property loss caused by fire or other reasons.
- Ensure that the installation surface is solid enough to bear the weight of the inverter to avoid personal injury or property loss caused by the collapse of the mounting structure or other reasons.
- In residential areas, do not install the inverter on plaster board walls or walls made of similar materials with a weak sound insulation performance because the noise generated by the inverter may interfere with residents.

Installation Angle Requirements

The inverter can be wall-mounted or support-mounted. The installation angle requirements are as follows:

- Install the inverter vertically or at a maximum back tilt of 15 degrees to facilitate heat dissipation.
- Do not install the inverter at forward tilted, excessive backward tilted, side tilted, horizontal, or upside down positions.

 Copyright © Huawei Technologies Co., Ltd.

Figure 4-1 Installation angle

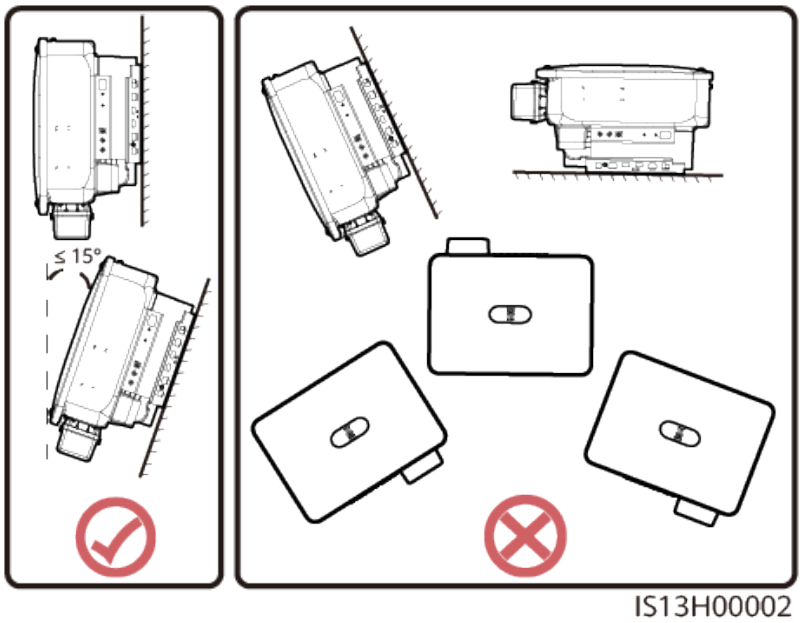

Installation Clearances

- Reserve enough clearances around the inverter to ensure sufficient space for installation and heat dissipation.

Figure 4-2 Clearances

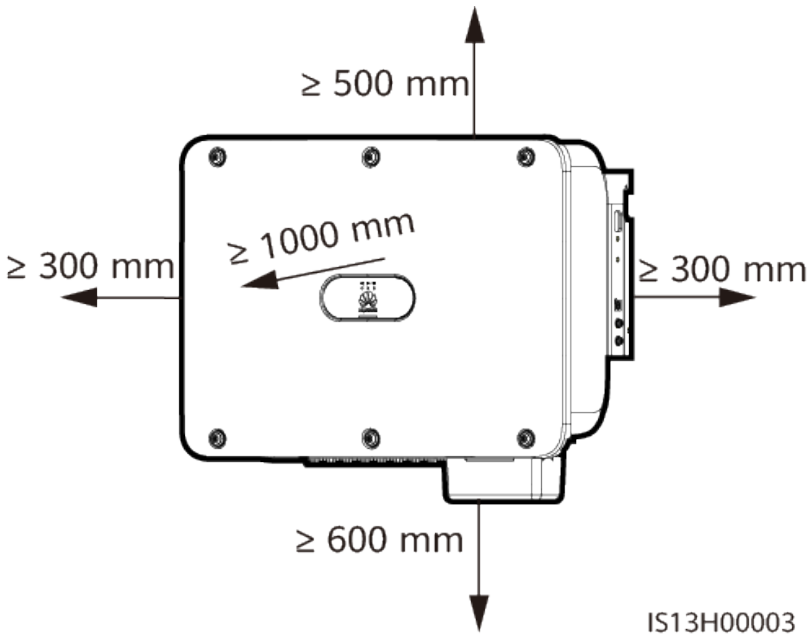

- When installing multiple inverters, install them in horizontal mode if sufficient space is available and install them in triangle mode if no sufficient space is available. Stacked installation is not recommended.

 Copyright © Huawei Technologies Co., Ltd.

Figure 4-3 Horizontal installation mode (recommended)

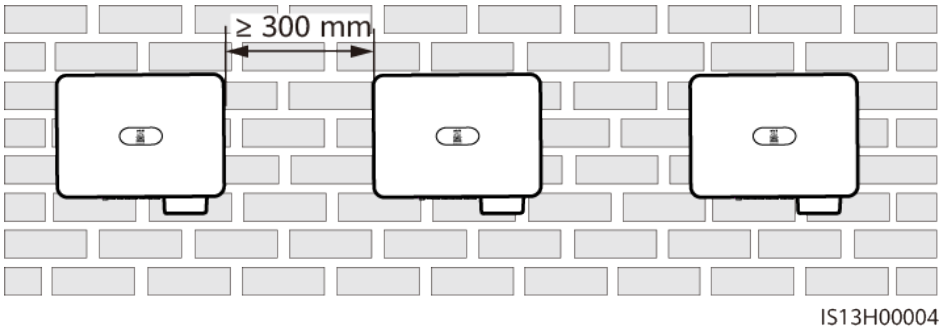

Figure 4-4 Two-layer triangle installation mode (recommended)

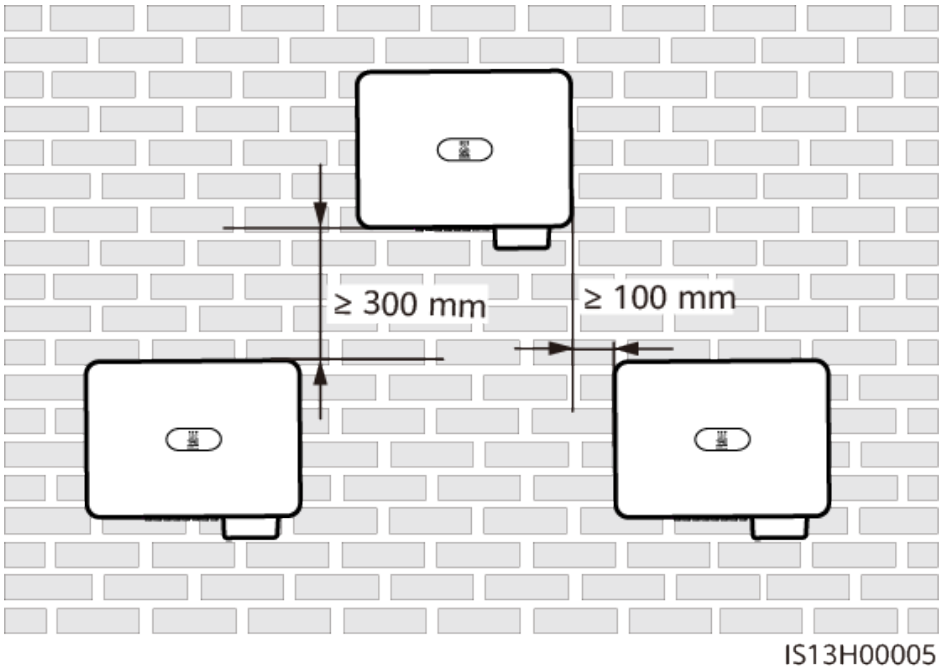

Figure 4-5 Three-layer triangle installation mode (not recommended)

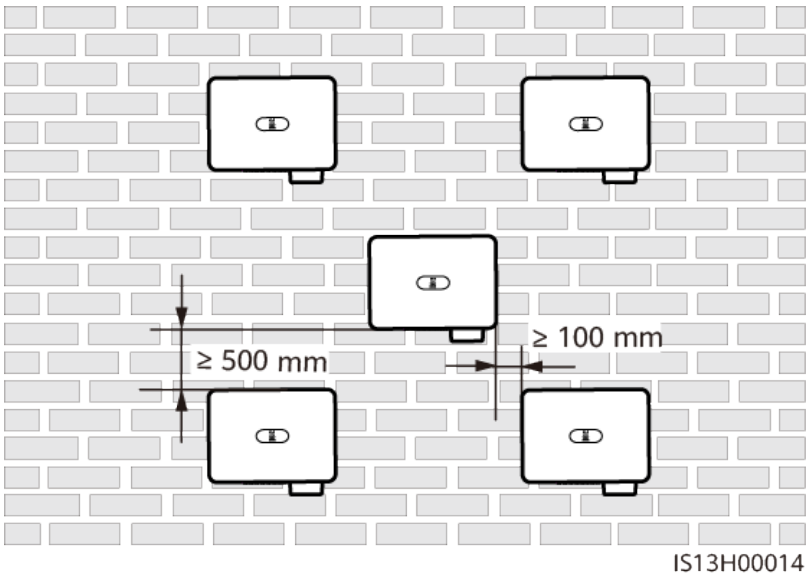

Figure 4-6 Stacked installation mode (not recommended)

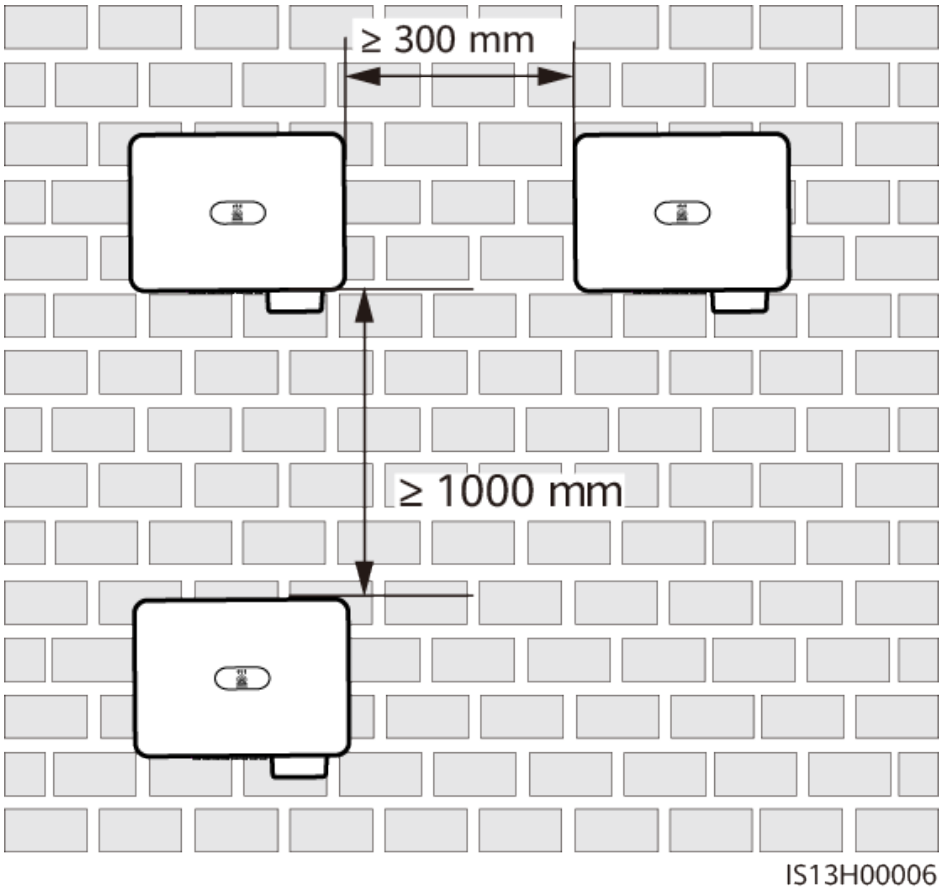

Figure 4-7 Back-to-back installation mode (not recommended)

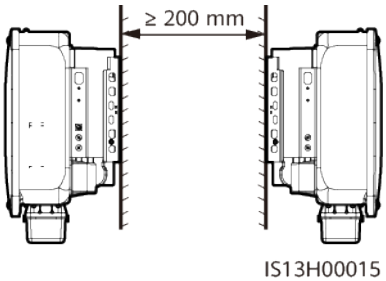

NOTE

The installation figures are for reference only and are irrelevant to the inverter cascading scenario.

4.4 Moving the Inverter

Procedure

Step 1 Lift the inverter out of the packing case and move it to the installation position.

CAUTION

- Move the inverter with care to prevent device damage and personal injury.
- Do not use the wiring terminals and ports at the bottom to support any weight of the inverter.
- When you need to temporally place the inverter on the ground, use foam, cardboard, or other protection material to prevent damage to its enclosure.

Figure 4-8 Moving the inverter

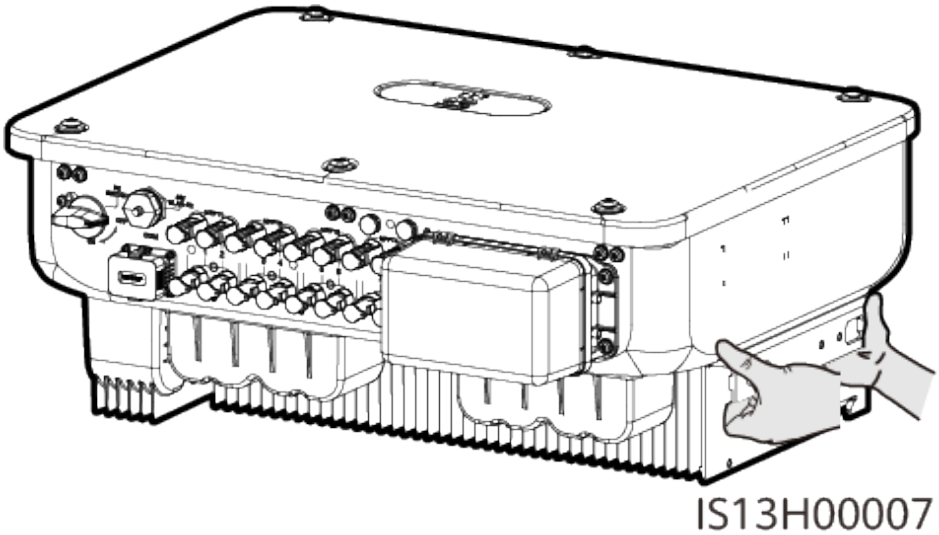

----End

4.5 Installing the Mounting Bracket

Installation Precautions

Before installing the mounting bracket, remove the torx key and keep it for later use.

Figure 4-9 Position for binding the torx key

(1) Torx key

Figure 4-10 shows the dimensions of mounting holes for the inverter.

Figure 4-10 Mounting bracket dimensions

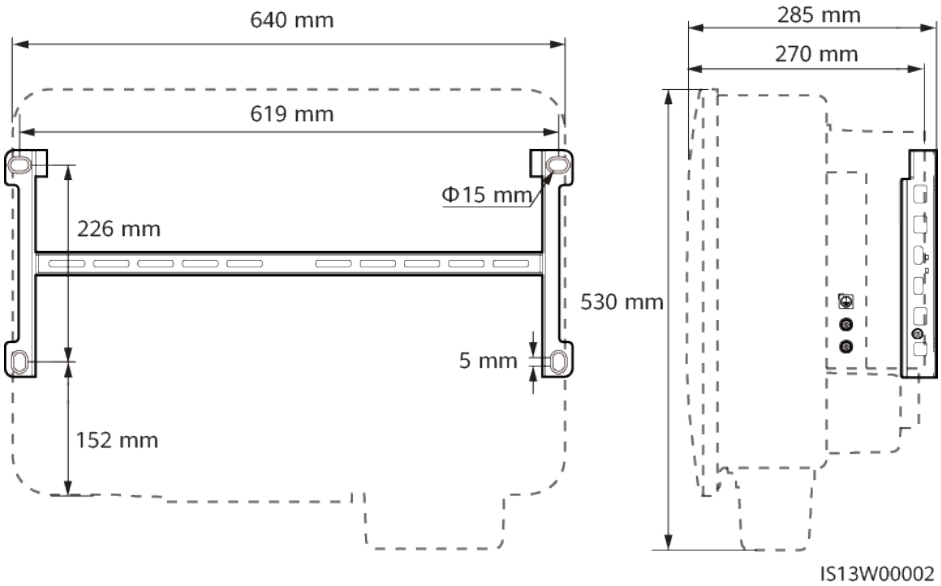

4.5.1 Support Mounting

Procedure

Step 1 Secure the mounting bracket.

Figure 4-11 Securing the mounting bracket

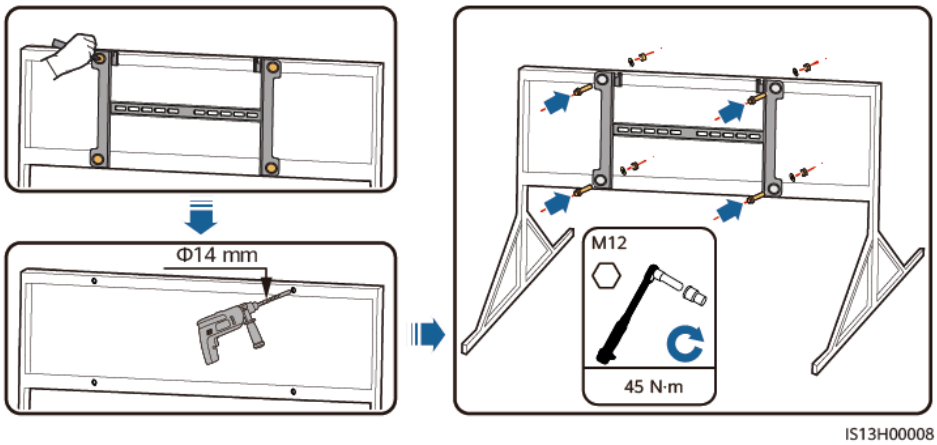

NOTE

You are advised to apply anti-rust paint on the hole positions for protection.

----End

4.5.2 Wall Mounting

Prerequisites

You have prepared expansion bolts. M12x60 stainless steel expansion bolts are recommended.

Procedure

Step 1 Determine the hole positions and mark them using a marker.

Step 2 Secure the mounting bracket.

DANGER

Avoid drilling holes into the water pipes or power cables buried in the wall.

Figure 4-12 Expansion bolt structure

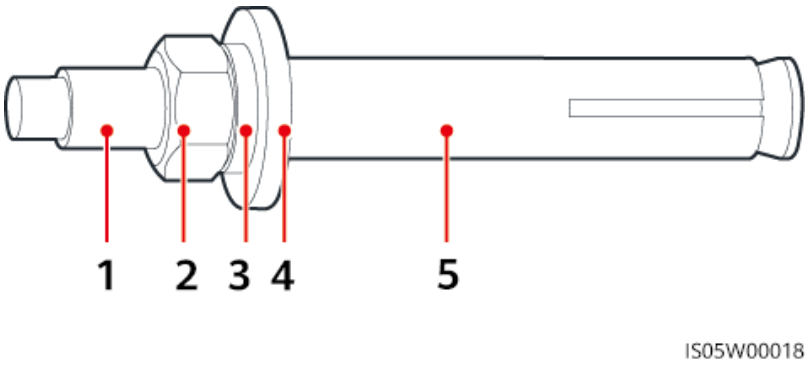

(1) Bolt (2) Nut (3) Spring washer

(4) Flat washer (5) Expansion sleeve

NOTICE

- To prevent dust inhalation or contact with eyes, wear safety goggles and a dust mask when drilling holes.
- Use a vacuum cleaner to clean up dust in and around the holes, and measure the spacing. If the holes are inaccurately positioned, drill the holes again in correct positions.
- Level the top of the expansion sleeve with the concrete wall after removing the nut, spring washer, and flat washer. Otherwise, the mounting bracket will not be securely installed on the concrete wall.

 Copyright © Huawei Technologies Co., Ltd.

Figure 4-13 Installing an expansion bolt

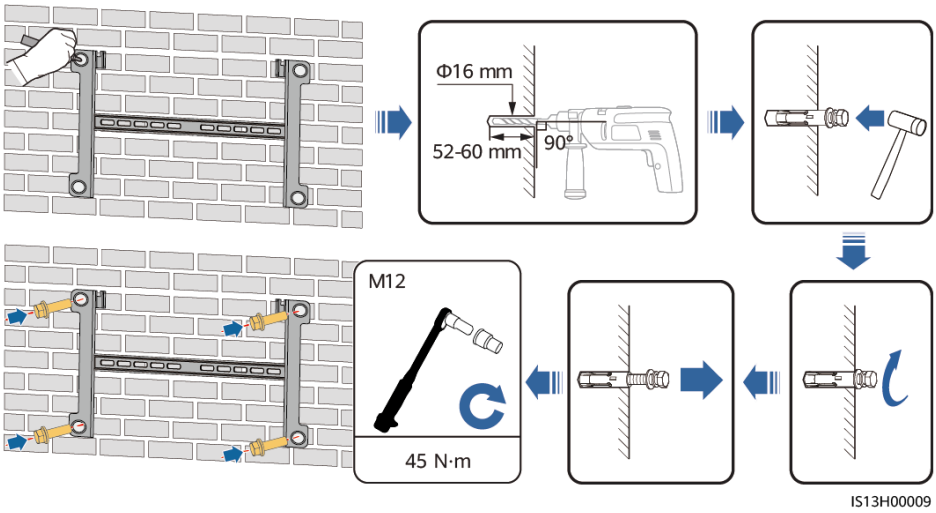

----End

4.6 Installing the Inverter

Step 1 (Optional) Install the DC switch locking screw.

NOTE

- The DC switch locking screw is used to lock the DC switch (DC SWITCH) to prevent the inverter from being started by mistake.
- For models used in Australia, install the DC switch locking screw according to local standards. The DC switch locking screw is delivered with the inverter.

Figure 4-14 Installing the DC switch locking screw

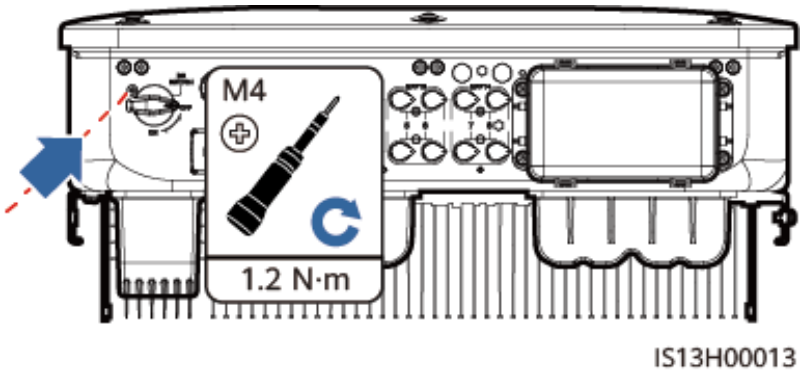

Step 2 Install the inverter on the mounting bracket.

Figure 4-15 Installing the inverter

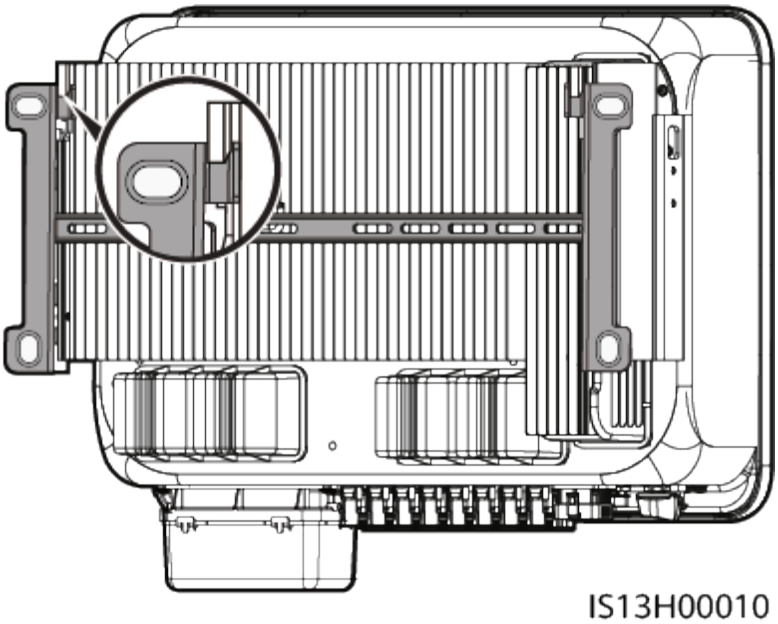

Step 3 Tighten the screws on both sides of the inverter.

Figure 4-16 Tightening the screws

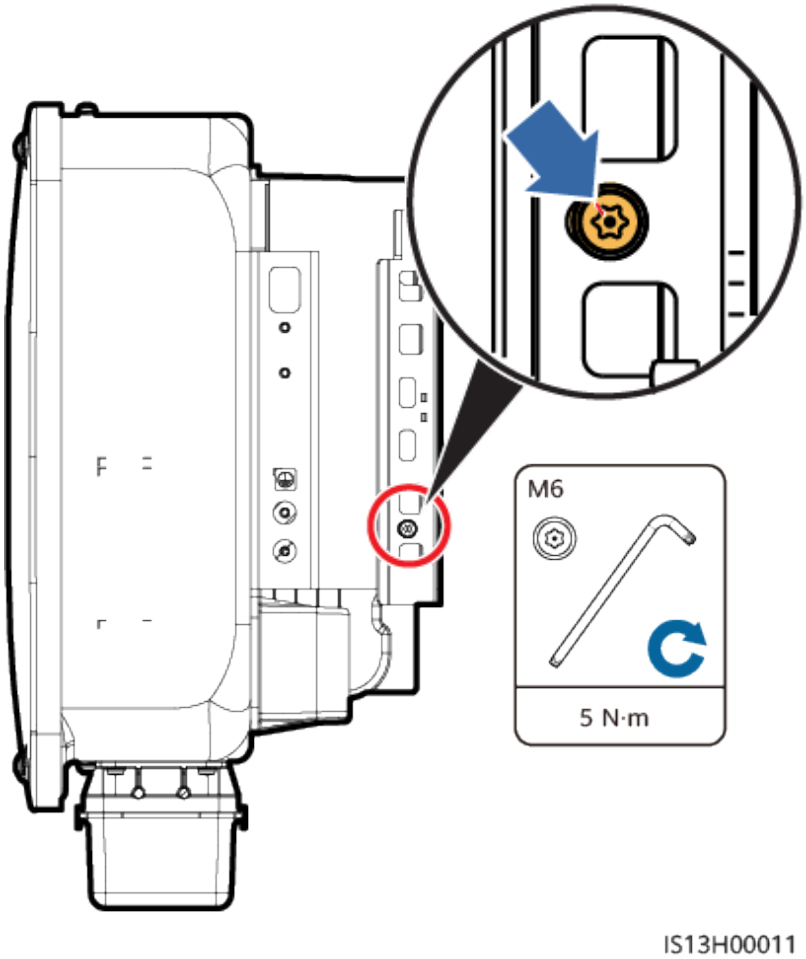

NOTICE

Secure the screws on the sides before connecting cables.

----End

 Copyright © Huawei Technologies Co., Ltd.

5 Electrical Connections

5.1 Precautions

DANGER

When exposed to sunlight, the PV arrays supply DC voltage to the inverter. Before connecting cables, ensure that all **DC SWITCH** on the inverter are OFF. Otherwise, the high voltage of the inverter may result in electric shocks.

DANGER

- The site must be equipped with qualified fire fighting facilities, such as fire sand and carbon dioxide fire extinguishers.
- Wear personal protective equipment and use dedicated insulated tools to avoid electric shocks or short circuits.

WARNING

- The equipment damage caused by incorrect cable connections is beyond the warranty scope.
- Only certified electricians are allowed to connect cables.
- Operation personnel must wear PPE when connecting cables.
- Before connecting cables to ports, leave enough slack to reduce the tension on the cables and prevent poor cable connections.
- Cables must be vertically routed into combiner boxes, PV terminals, and other wiring terminals to avoid damage caused by horizontal stress on the terminals, which is not covered under the warranty.

 Copyright © Huawei Technologies Co., Ltd.

CAUTION

- Stay away from the equipment when preparing cables to prevent cable scraps from entering the equipment. Cable scraps may cause sparks and result in personal injury and equipment damage.

NOTE

The cable colors shown in the electrical connection diagrams provided in this section are for reference only. Select cables in accordance with local cable specifications (green-and-yellow cables are only used for protective earthing).

5.2 Preparing Cables

Figure 5-1 SUN2000 cable connections (the components in dashed boxes are optional)

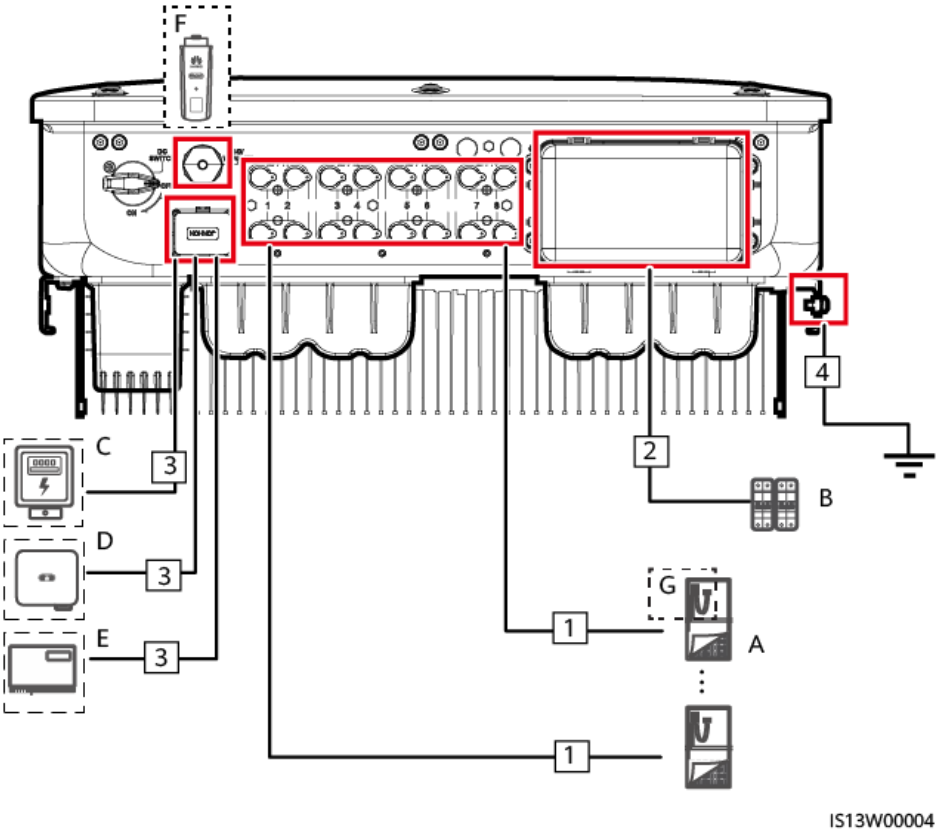

 Copyright © Huawei Technologies Co., Ltd.

Table 5-1 Component description

No.	Component	Description	Source
A	PV string	● A PV string consists of PV modules connected in series. ● The inverter supports eight PV string inputs.	Prepared by the customer
B	AC switch	To ensure that the inverter can be safely disconnected from the power grid when an exception occurs, connect an AC switch to the AC side of the inverter. Select an appropriate AC switch in accordance with local industry standards and regulations. Huawei recommends the following switch specifications: Three-phase AC circuit breaker with a rated voltage greater than or equal to 500 V AC and a rated current of: ● 63 A (SUN2000-29.9KTL/30KTL) ● 80 A (SUN2000-20KTL) ● 100 A (SUN2000-36KTL/40KTL)	Prepared by the customer
C	Power meter[1]	Supported meter models: DTSU666-H, DTSU666-HW, YDS60-80, YDS60-C24, DTSU71, DHSU1079-CT, DHSU1079-ZT, and DTSU71C [2]	Purchased from Huawei
D	SUN2000	Select a proper model as required.	Purchased from Huawei
E	SmartLogger	SmartLogger3000, SmartLogger5000B, or SmartMGC5000B	Purchased from Huawei
F	Smart Dongle	Select a proper model as required.	Purchased from Huawei
G	Smart PV Optimizer[3]	● MERC-1300W-P ● MERC-1100W-P ● SUN2000-1600W-PB1 ● SUN2000-1600W-PB1-SEA	Purchased from Huawei

 Copyright © Huawei Technologies Co., Ltd.

No.	Component	Description	Source
Note [1]: For details about how to operate a power meter, see the **DTSU666-H 100 A and 250 A Smart Power Sensor User Manual**, **DTSU666-HW Smart Power Sensor Quick Guide**, **YDS60-80 Smart Power Sensor Quick Guide**, **YDS60-C24 Smart Power Sensor Quick Guide**, **DTSU71 Smart Power Sensor Quick Guide**, **DHSU1079-CT Smart Power Sensor Quick Guide**, **DHSU1079-ZT Smart Power Sensor Quick Guide**, or **DTSU71C Smart Power Sensor Quick Guide**. Note [2]: SUN2000MA V100R001C20SPC116 and later versions can connect to DTSU666-HW power meters. Note [3]: For details about optimizer operations and configuration principles, see **MERC-(1300W, 1100W)-P Smart PV Optimizer User Manual** or *SUN2000-1600W-PB1 Smart PV Optimizer User Manual*.			

NOTICE

Cable specifications must meet the requirements in local standards.

Table 5-2 Cable description

No.	Cable	Type	Recommended Specifications	Source
1	DC input power cable	PV cable that meets the 1100 V standard	• Conductor cross-sectional area: 4–6 mm^2 • Cable outer diameter: 5.5–9 mm	Prepared by the customer
2	AC output power cable	Outdoor copper-core/aluminum-core cable	• Conductor cross-sectional area: 16–50 mm^2 outdoor copper-core cable/35–50 mm^2 outdoor aluminum-core cable[a] • Cable outer diameter: 16–38 mm	Prepared by the customer
3	(Optional) Signal cable	Outdoor shielded twisted pair (recommended model: DJYP2VP2-2x2x0.75)	• Conductor cross-sectional area: 0.2–1 mm^2 • Cable outer diameter: 4–11 mm	Prepared by the customer

Copyright © Huawei Technologies Co., Ltd.

No.	Cable	Type	Recommended Specifications	Source
4	PE cable	Outdoor single-core copper cable	Conductor cross-sectional area: ≥ 16 mm^2	Prepared by the customer
Note a: Five-core cables with a cross-sectional area of 5 x 35 mm^2 or 5 x 50 mm^2 are not supported.				

NOTICE

If the inverter is used with an optimizer, route AC and DC power cables separately to prevent AC power cables from interfering with optimizer communication.

5.3 Connecting the PE Cable

DANGER

- Ensure that the PE cable is securely connected. Otherwise, electric shocks may occur.
- Do not connect the neutral wire to the enclosure as a PE cable. Otherwise, electric shocks may occur.

NOTE

- The PE point at the AC output port is used only as a PE equipotential bonding point, and cannot substitute for the PE point on the enclosure.
- It is recommended that silicone grease or paint be applied around the ground terminal after the PE cable is connected.
- You can enable or disable phase-to-ground short-circuit protection on the app (choose **Settings > Feature parameters > Phase-to-ground short-circuit protection**) to address the situation in which a phase wire is short-circuited to PE. If this function is disabled, the inverter detects the alarm and can connect to the power grid and generate power normally.

Procedure

Step 1 Crimp an OT terminal.

 Copyright © Huawei Technologies Co., Ltd.

NOTICE

- Avoid scratching the core wire when stripping a cable.
- The cavity formed after the conductor crimp strip of the OT terminal is crimped must wrap the core wire completely. The core wire must make close contact with the OT terminal.
- Wrap the wire crimping area with heat shrink tubing or insulation tape. The heat shrink tubing is used as an example.
- Use a heat gun carefully to avoid heat damage to the equipment.

Figure 5-2 Crimping an OT terminal

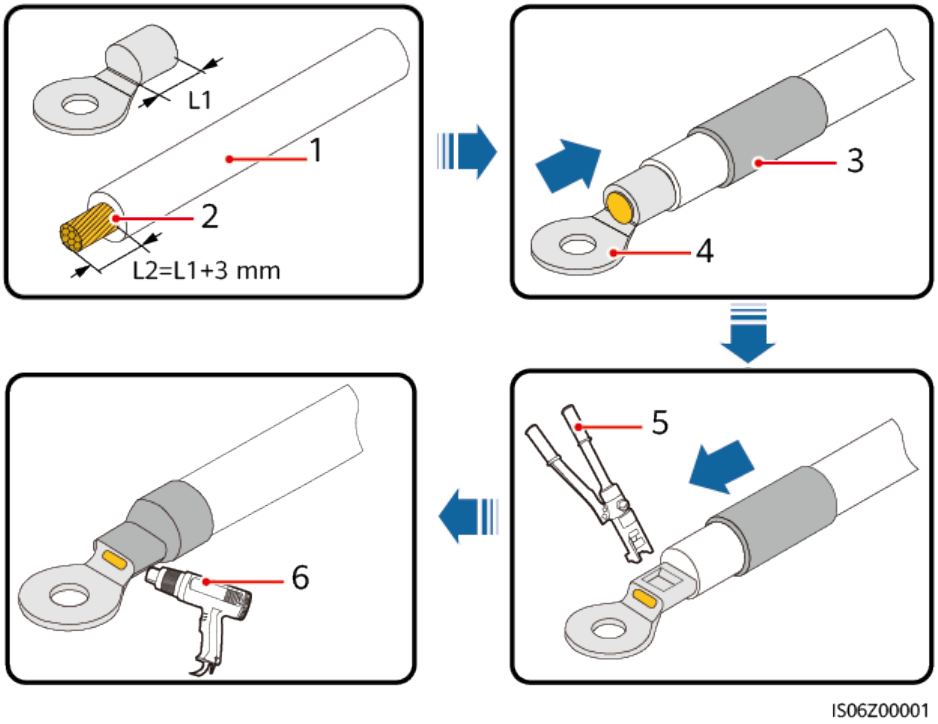

(1) Cable	(2) Core wire	(3) Heat shrink tubing
(4) OT terminal	(5) Crimping tool	(6) Heat gun

Step 2 Connect the PE cable.

 Copyright © Huawei Technologies Co., Ltd.

Figure 5-3 Connecting the PE cable

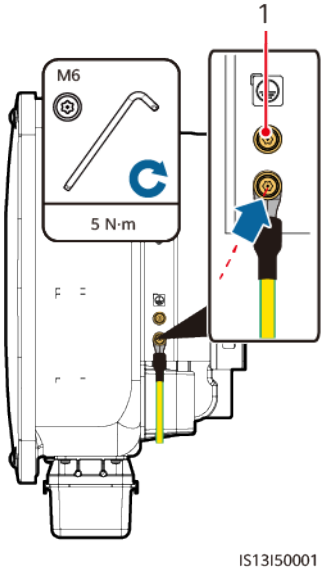

(1) Standby PE point

----End

5.4 Connecting an AC Output Power Cable

Precautions

An AC switch must be installed on the AC side of the inverter to ensure that the inverter can be safely disconnected from the power grid.

WARNING

- Do not connect loads between an inverter and an AC switch that directly connects to the inverter. Otherwise, the switch may trip by mistake.
- If an AC switch is used with specifications beyond local standards, regulations, or the Company's recommendations, the switch may fail to turn off in a timely manner in case of exceptions, causing serious faults.

CAUTION

Each inverter shall be equipped with an AC output switch. Multiple inverters shall not connect to the same AC switch.

Cables must be vertically routed into the maintenance compartment, PV terminals, and other wiring terminals to avoid damage caused by horizontal stress on the terminals, which is not covered under the warranty.

 Copyright © Huawei Technologies Co., Ltd.

NOTICE

- If the external AC switch provides the leakage protection function, the rated residual operating current must be greater than or equal to 300 mA.
- If multiple inverters are connected to the master leakage protection device through their external AC switches, the rated residual operating current of the device must be greater than or equal to the number of inverters x 300 mA.
- Use a socket wrench and extension rod to connect the AC power cable. The extension rod must be longer than 100 mm.
- Reserve sufficient slack for the PE wire to ensure that the PE wire is the last cable bearing the force when the AC output power cable is subject to a pulling force due to force majeure.
- Do not install third-party devices in the AC connection box.
- You need to prepare M8 OT terminals by yourself.
- In the MBUS communication scenario, if the SmartLogger3000 is used, you are advised to use multi-core cables with the maximum communication distance of 1000 m. To use other types of AC power cables, contact local technical support.
- In the MBUS communication scenario, if the SmartLogger5000B or SmartMGC5000B is used, use multi-core cables with the maximum communication distance of 500 m. To use other types of AC power cables, contact local technical support.

Wiring Area

Figure 5-4 Wiring ports

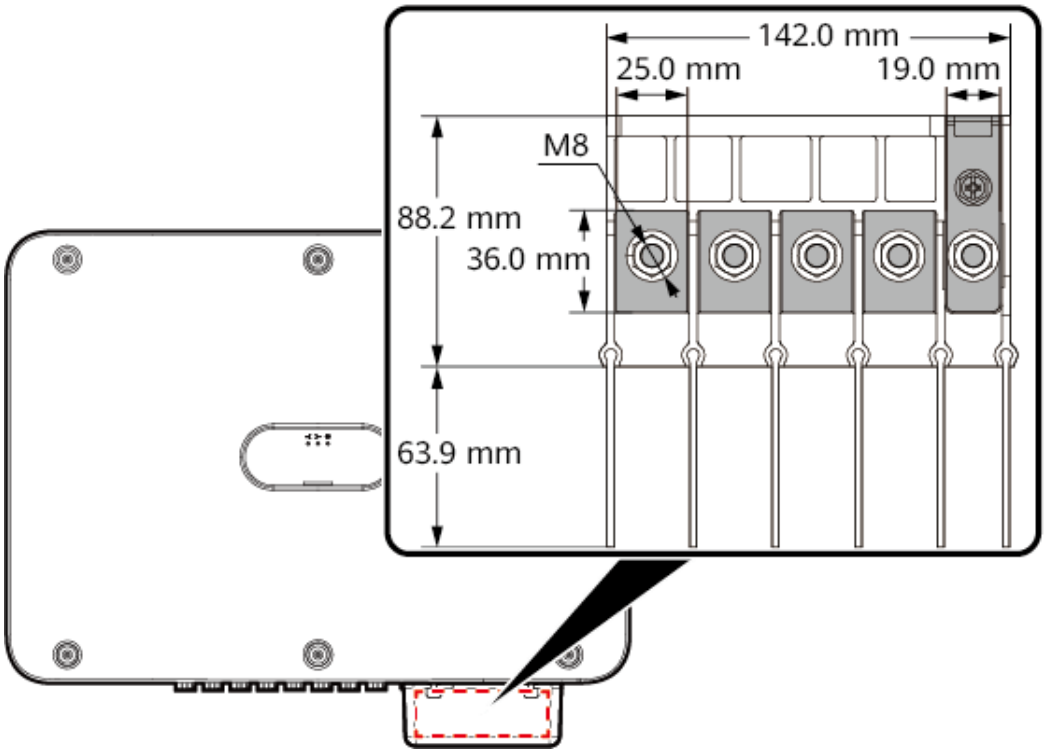

Copyright © Huawei Technologies Co., Ltd.

Figure 5-5 Specifications of the crimped OT/DT terminal

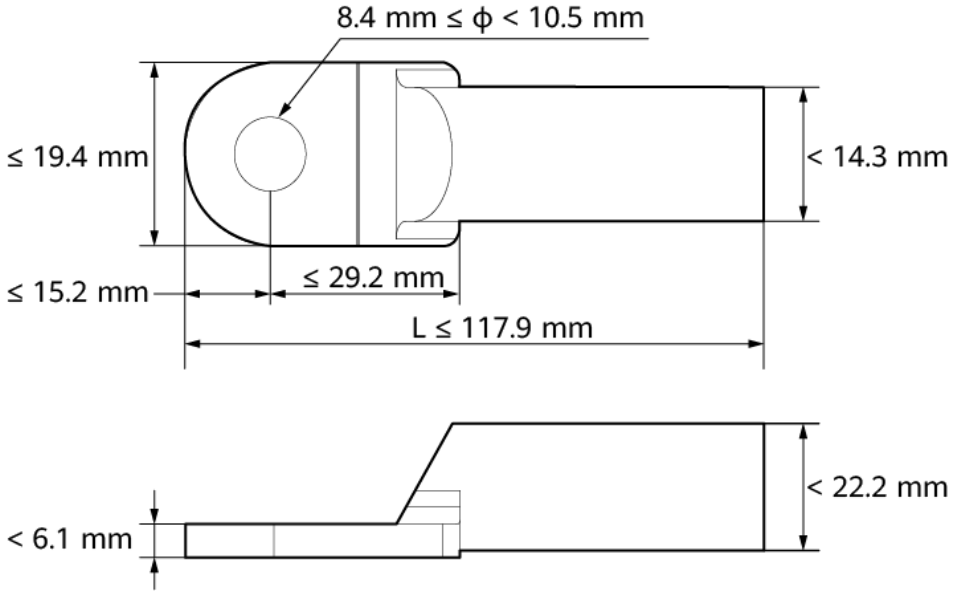

Requirements for the OT or DT Terminal

- If a copper cable is used, use copper wiring terminals.
- If a copper-clad aluminum cable is used, use copper wiring terminals.
- If an aluminum alloy cable is used, use copper-aluminum transition wiring terminals, or aluminum wiring terminals along with copper-aluminum transition spacers.

NOTICE

- Do not connect aluminum wiring terminals to the AC terminal block. Otherwise the electrochemical corrosion will occur and affect the reliability of cable connections.
- Comply with the IEC61238-1 requirements when using copper-aluminum transition wiring terminals, or aluminum wiring terminals along with copper-aluminum transition spacers.
- If copper-aluminum transition spacers are used, pay attention to the front and rear sides. Ensure that the aluminum sides of spacers are in contact with aluminum wiring terminals, and copper sides of spacers are in contact with the AC terminal block.

 Copyright © Huawei Technologies Co., Ltd.

Figure 5-6 Requirements for the OT/DT terminal

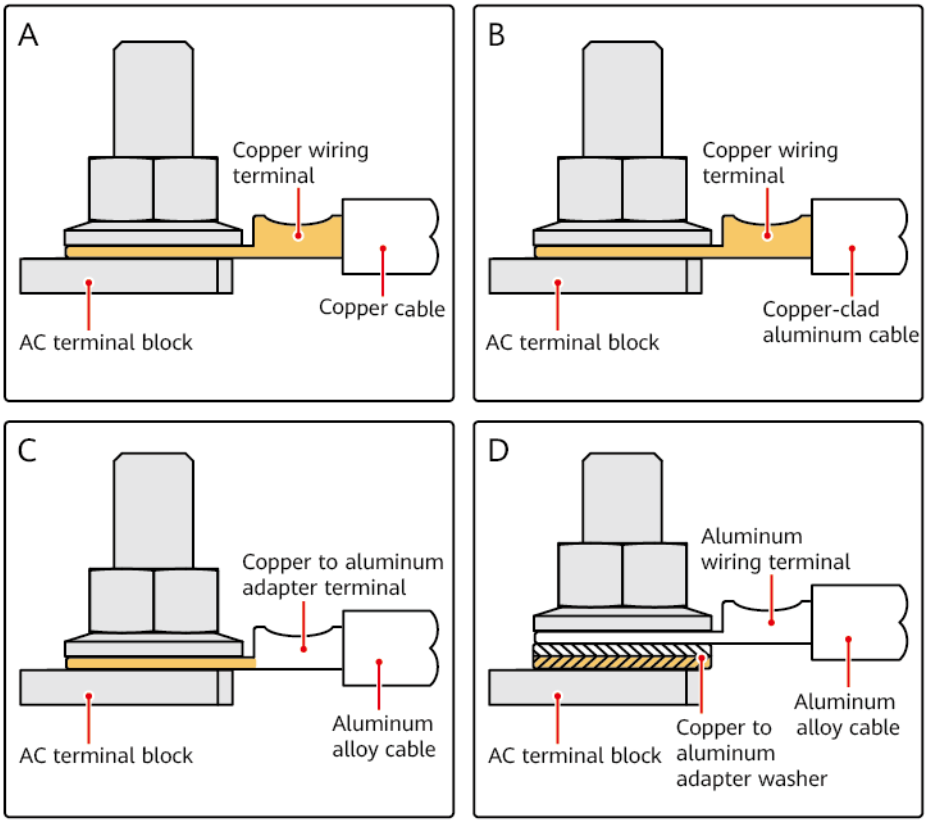

Procedure

Step 1 Remove the AC terminal box and install partition boards.

NOTICE

To remove the AC terminal box, do as follows:

Method 1: Press the two buckles at the front of the AC terminal box respectively with both thumbs. Rotate the AC terminal box counterclockwise and remove it.

Method 2: Press either of the buckles at the front of the AC terminal box with both thumbs, and then press the other buckle. Rotate the box counterclockwise and remove it.

 Copyright © Huawei Technologies Co., Ltd.

Figure 5-7 Removing the AC terminal box

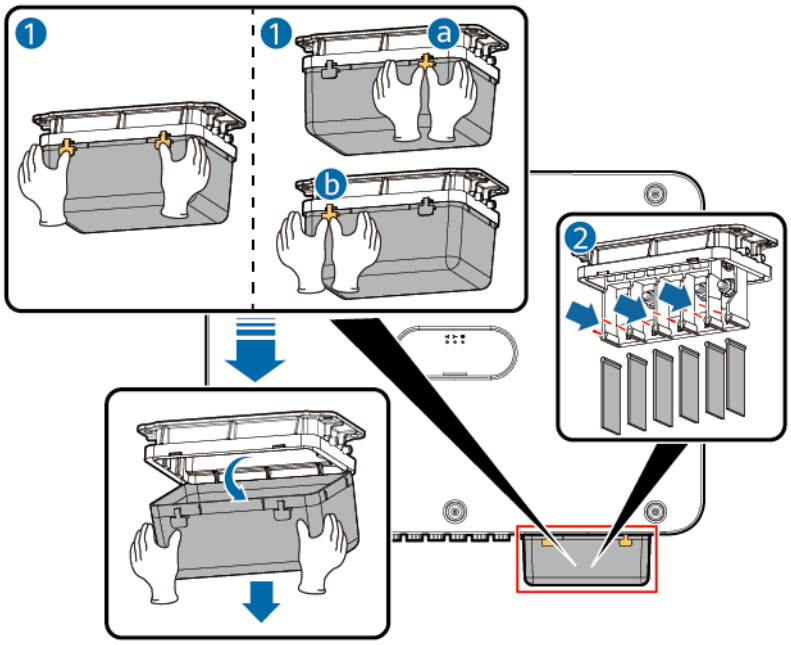

Step 2 Connect the AC output power cable.

NOTE

- Do not route a cable with a crimped OT terminal directly through the rubber liner. Otherwise, the liner may be damaged.
- Reserve sufficient slack for the PE wire to ensure that the PE wire is the last cable bearing the force when the AC output power cable is subject to a pulling force due to force majeure. It is recommended that the stripping length of the PE cable be 15 mm longer than that of other cables.
- The cable colors shown in the figures are for reference only. Select an appropriate cable according to the local standards.

 Copyright © Huawei Technologies Co., Ltd.

Figure 5-8 Stripping an AC power cable (using a five-core cable as an example)

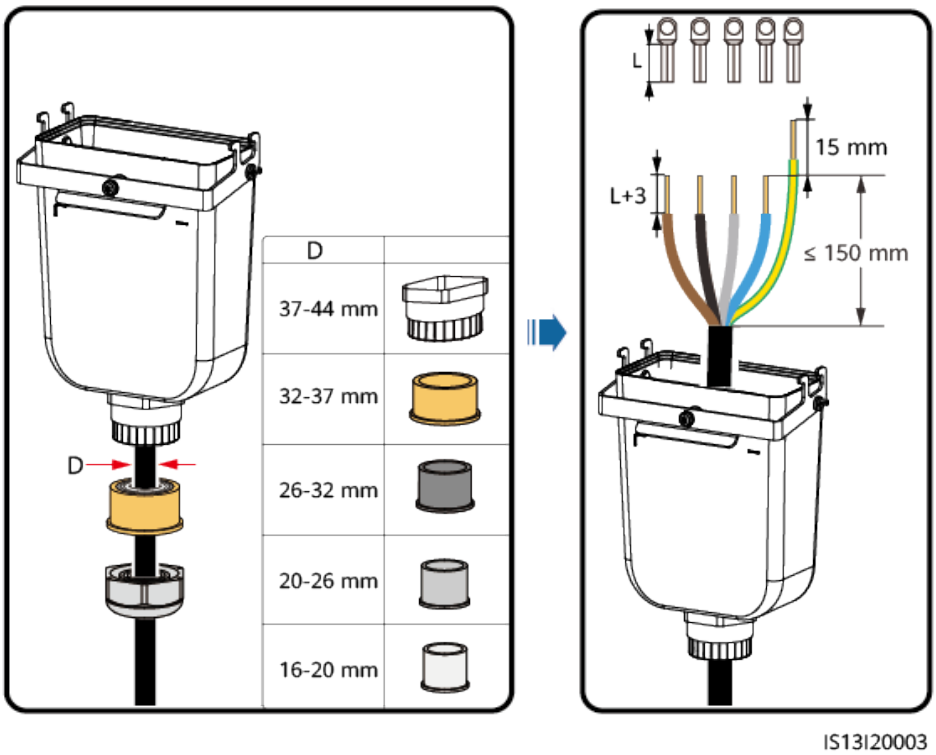

Figure 5-9 Five-core cable (L1, L2, L3, N, and PE)

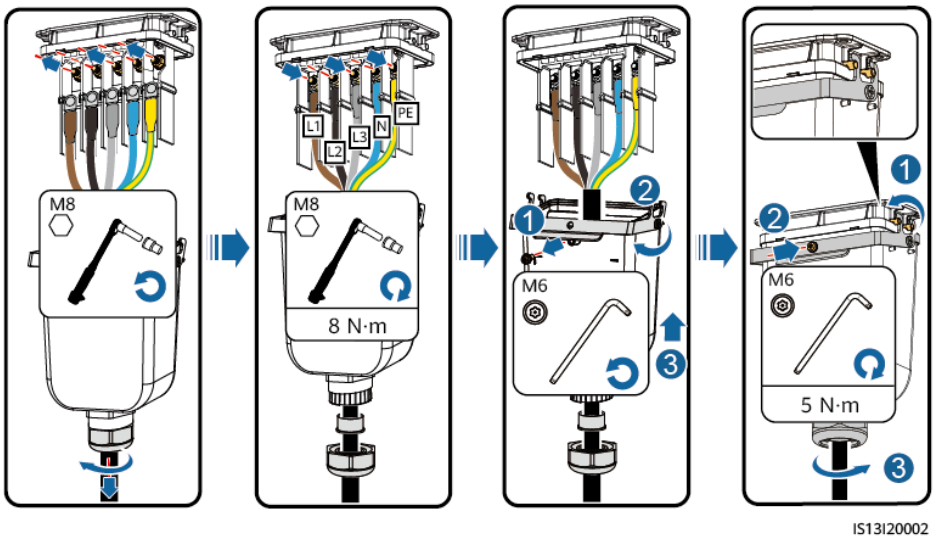

Copyright © Huawei Technologies Co., Ltd.

Figure 5-10 Four-core cable (L1, L2, L3, and PE)

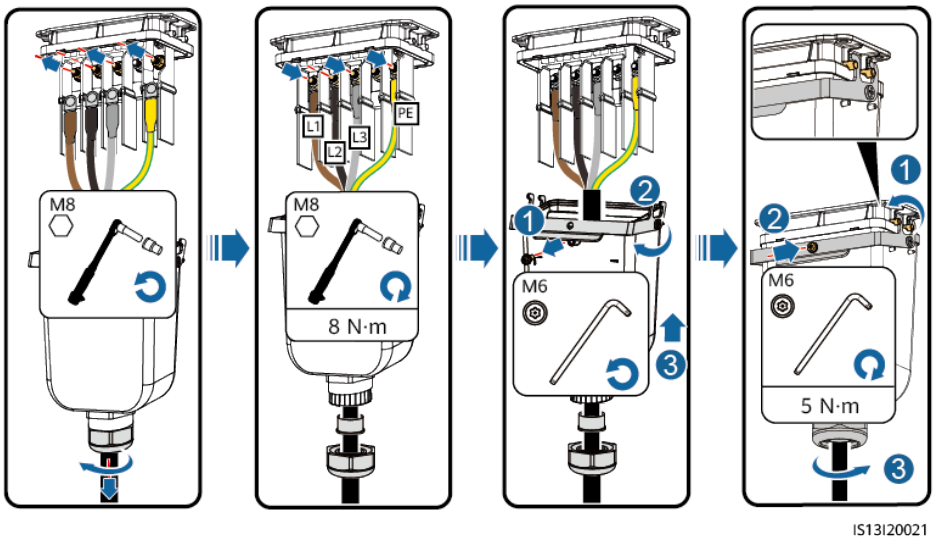

Figure 5-11 Four-core cable (L1, L2, L3, and N)

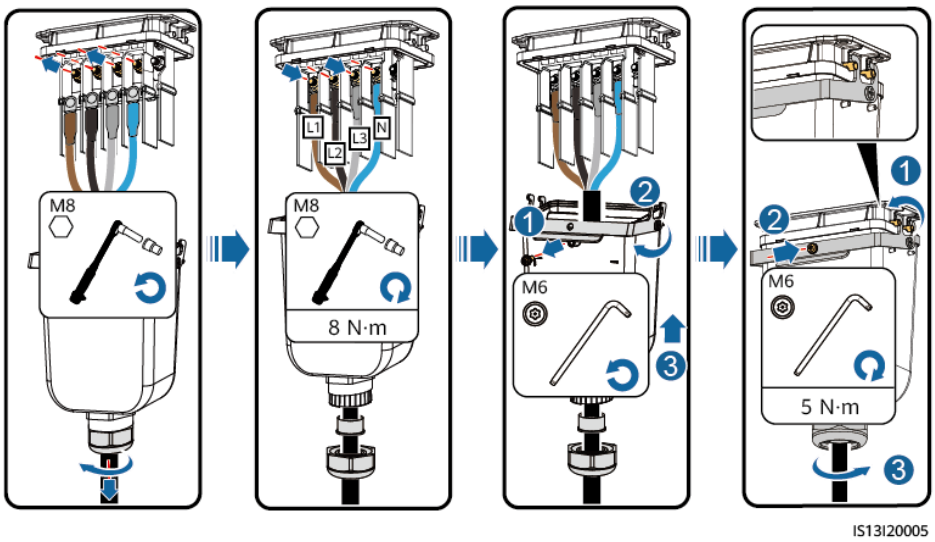

Copyright © Huawei Technologies Co., Ltd.

Figure 5-12 Three-core cable (L1, L2, and L3)

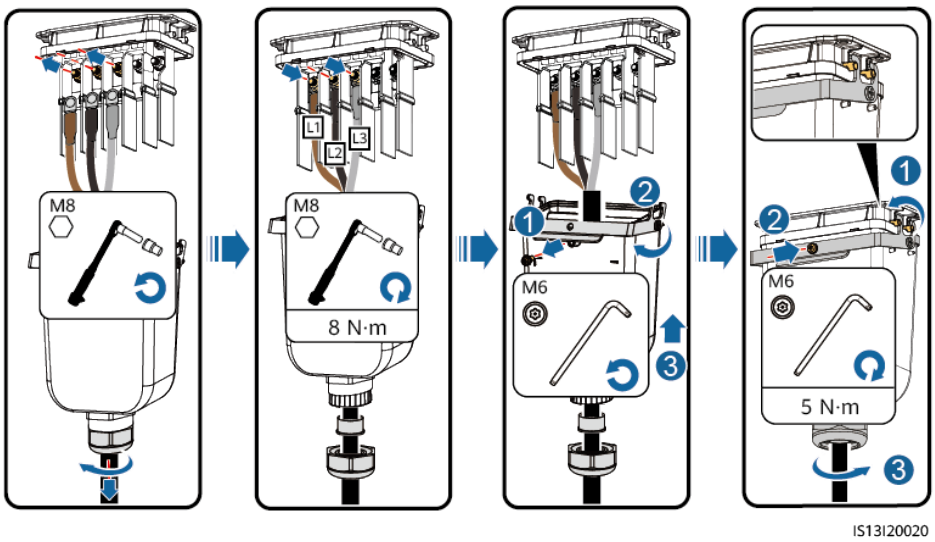

Figure 5-13 Wiring requirements

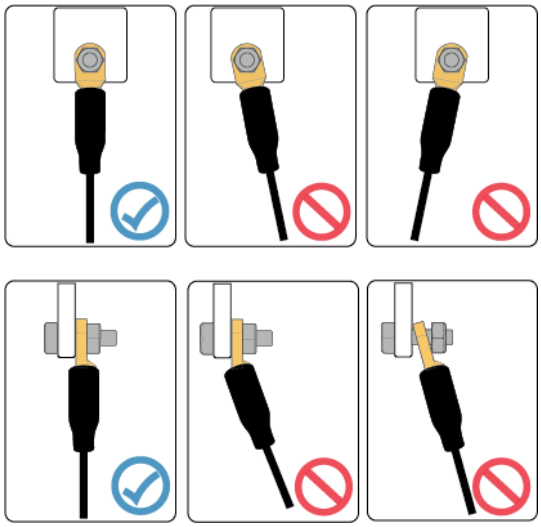

----End

5.5 Connecting DC Input Power Cables

CAUTION

- There are two models of PV connectors delivered with the device: Amphenol Helios H4 and Staubli MC4. PV connectors of different models cannot be used together. Device damage caused by mixed use of different PV connectors is not covered by the warranty.
- Take waterproof and insulation measures for unused DC power cables to avoid personal injury or property loss caused by accidental contact with high voltage or other reasons.

 Copyright © Huawei Technologies Co., Ltd.

5.5.1 Cable Connection Description

Precautions

DANGER

- Before connecting the DC input power cables, ensure that the DC voltage is within the safe range (lower than 60 V DC) and that the DC switch on the inverter is OFF. Failing to do so may result in electric shocks.
- When the inverter is running, it is not allowed to work on the DC input power cables, such as connecting or disconnecting a PV string or a PV module in a PV string. Failing to do so may cause electric shocks.
- If no PV string connects to a DC input terminal of the inverter, do not remove the watertight cap from the DC input terminals. Otherwise, the IP rating of the inverter will be affected.

WARNING

Ensure that the following conditions are met. Otherwise, the inverter may be damaged or even a fire may occur.

- PV modules connected in series in each PV string are of the same specifications.
- The DC input voltage of the SUN2000-29.9KTL/30KTL/36KTL/40KTL-M3 shall not exceed 1100 V DC under any conditions.
- The DC input voltage of the SUN2000-20KTL-M3 shall not exceed 800 V DC under any conditions.
- The polarities of electrical connections must be correct on the DC input side. The positive and negative terminals of a PV string must be connected to corresponding positive and negative DC input terminals of the inverter.
- If a DC input power cable is reversely connected, do not immediately operate on the **DC SWITCH** or positive and negative connectors. Wait until the night when solar irradiance declines and the PV string current drops to below 0.01 A. Then set the **DC SWITCH** to **OFF**, remove the positive and negative connectors, and correct the polarities of the DC input power cable.

WARNING

During the installation of PV strings and the inverter, the positive or negative terminals of PV strings may be short-circuited to ground if the power cables are not properly installed or routed. In this case, an AC or DC short circuit may occur and damage the inverter. The resulting device damage is not covered under any warranty.

 Copyright © Huawei Technologies Co., Ltd.

NOTICE

- The inverter does not support power supplies other than PV strings. The output of the PV string connected to the inverter cannot be grounded. Ensure that the PV module output is well insulated to ground.
- To maximize energy yield, the voltage difference between MPPTs shall be less than 85 V if no optimizer is configured. If optimizers are configured, refer to the optimizer user manual.

Figure 5-14 DC input terminals

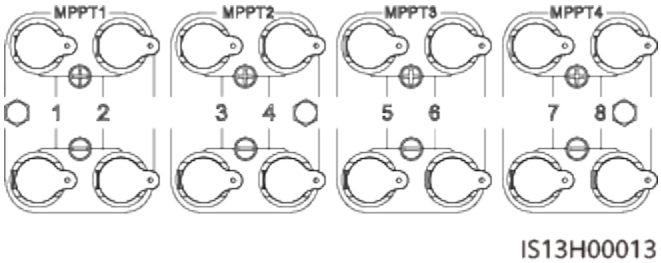

If the DC input terminals are not fully configured with PV strings, the DC input terminals must meet the following requirements:

1. Evenly distribute the DC input power cables on the four MPPTs and preferentially connect them from MPPT 1 to MPPT 4.
2. Maximize the number of connected MPPT circuits.

Quantity of PV Strings	Terminal Selection	Quantity of PV Strings	Terminal Selection
1	PV1	2	PV1, PV7
3	PV1, PV3, PV7	4	PV1, PV3, PV5, PV7
5	PV1, PV2, PV3, PV5, PV7	6	PV1, PV2, PV3, PV5, PV7, PV8
7	PV1, PV2, PV3, PV4, PV5, PV7, PV8	8	PV1, PV2, PV3, PV4, PV5, PV6, PV7, PV8

 Copyright © Huawei Technologies Co., Ltd.

5.5.2 Measuring the Insulation Resistance of PV Strings to the Ground

NOTICE

In a PV system, the insulation resistance of a PV string reflects the insulation status between the PV string and the ground. A low insulation resistance indicates poor insulation performance, which may cause personal safety and inverter performance problems. Therefore, before connecting PV strings to the inverter, measure the insulation resistance of each PV string to the ground and check that the insulation resistance is normal to ensure normal operation of the inverter.

5.5.2.1 Optimizers Configured

Prerequisites

Set a multimeter to the DC position and use it to measure the voltage between the positive and negative terminals of a PV string. If the voltage is a negative value, the positive and negative terminals are connected in reverse polarity. Rectify the connection.

Procedure

Step 1 Connect the positive and negative output connectors of a PV string to a branch cable, and use an insulation resistance tester to measure the insulation resistance of the PV string cable to the ground: Add a maximum of 1500 V DC voltage between the cable and the ground, and check the insulation resistance.

Figure 5-15 Measuring the insulation resistance of each PV string

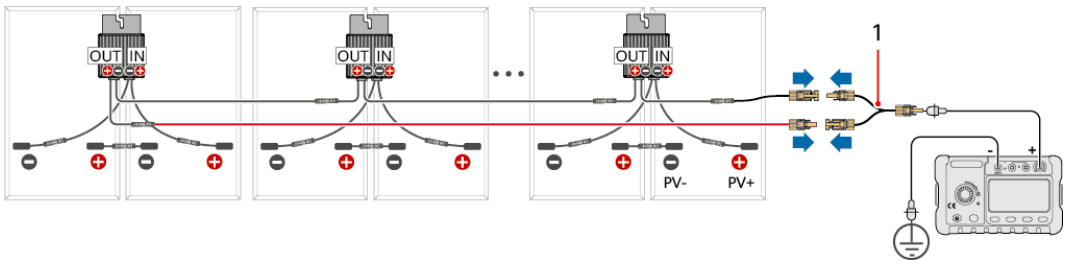

(1) Branch cable

If...	Then...
Insulation resistance ≥ 1 MΩ	The PV string is normal.
Insulation resistance < 1 MΩ	You need to check the insulation of the cable or PV string. Go to **Step 2**.

Copyright © Huawei Technologies Co., Ltd.

Step 2 Disconnect the extension cable from the optimizer. Connect the extension cable to the branch cable and use an insulation resistance tester to measure the insulation resistance of the extension cable to the ground. Add a maximum of 1500 V DC voltage between the cable and the ground, and check the insulation resistance.

Figure 5-16 Measuring the insulation resistance of the extension cable

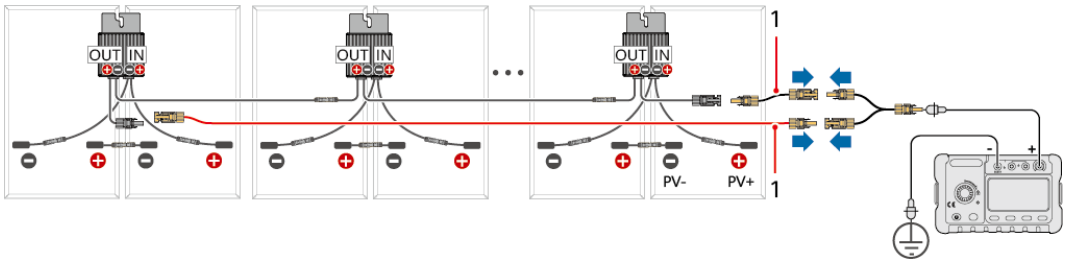

(1) Extension cable

If...	Then...
Insulation resistance ≥ 1 MΩ	The extension cable is normal. Go to **Step 3**.
Insulation resistance < 1 MΩ	The extension cable is abnormal. Check the cable. After the check is completed, go to **Step 1** to check whether the PV string is normal. If the PV string is abnormal, go to **Step 3**.

Step 3 Disconnect the suspected faulty PV module and the paired optimizer from the PV string. Keep the optimizer connected to the PV module and measure their insulation resistance to the ground.

Figure 5-17 Measuring the insulation resistance of a PV module and the paired optimizer

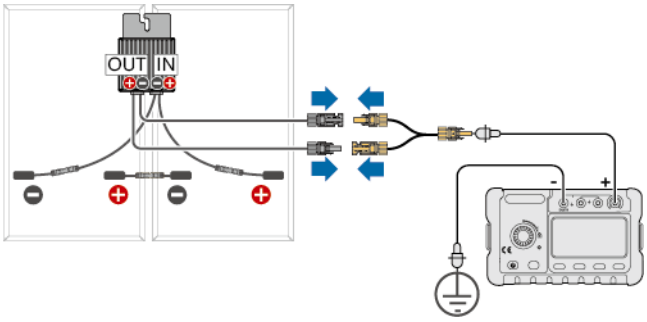

If...	Then...
Insulation resistance ≥ 1 MΩ	If the disconnected optimizer and PV module are normal, perform **Step 3** for another PV module and the paired optimizer.
Insulation resistance < 1 MΩ	The optimizer, PV module, or both are faulty. Go to **Step 4** for troubleshooting.

Step 4 Check whether the PV module or optimizer is faulty by measuring each component separately:

1. Disconnect the PV module from the optimizer.
2. Connect the positive and negative output connectors of the optimizer to a branch cable, and then connect the cable to the positive probe of the insulation resistance tester. Connect the negative probe of the insulation resistance tester to the ground. Measure the insulation resistance of the optimizer to the ground.

Figure 5-18 Measuring the insulation resistance of an optimizer

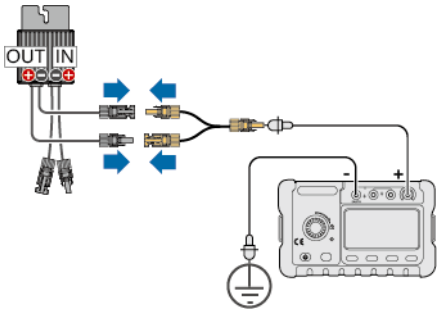

If...	Then...
Insulation resistance ≥ 1 MΩ	The optimizer is normal, but the PV module is faulty.
Insulation resistance < 1 MΩ	The optimizer is faulty. After replacing the optimizer, check whether the PV module is also faulty.

3. Measure the insulation resistance of the PV module. You are advised to consult the PV module manufacturer to determine whether the PV module is abnormal.

NOTE

For a PV module without an optimizer, you do not need to use a branch cable to connect PV+ and PV–. Instead, measure the insulation resistance at the positive and negative terminals of the PV module separately.

 Copyright © Huawei Technologies Co., Ltd.

4. Replace the faulty PV module or optimizer.

----End

5.5.2.2 Optimizers Not Configured

Prerequisites

The voltage between the positive and negative terminals of a PV string is normal.

Set a multimeter to the DC position (measurement range ≥ 1100 V) and use it to measure the voltage between the positive and negative terminals of a PV string.

If...	Then...
Voltage < 0	The positive and negative terminals are connected in reverse polarity. Rectify the connection.
Voltage > 1100 V	There are too many PV modules, which may result in inverter damage. Do not connect the inverter.

Procedure

Step 1 Use an insulation resistance tester to measure the insulation resistance of a PV– cable to the ground. Add a maximum of 1500 V DC voltage between the cable and the ground, and check the insulation resistance.

Figure 5-19 Measuring the insulation resistance of PV– for each PV string

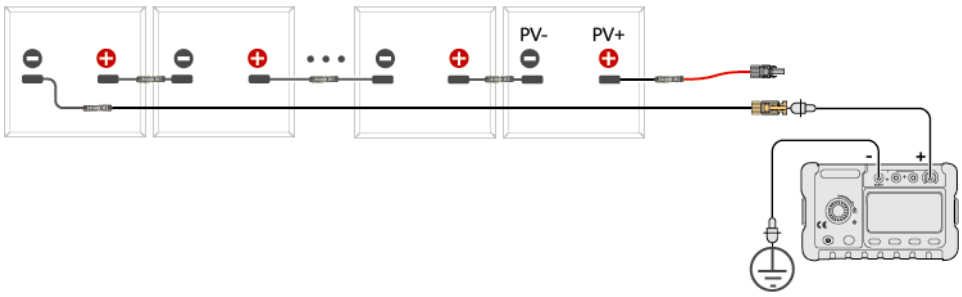

If...	Then...
Insulation resistance ≥ 1 MΩ	This is normal.
Insulation resistance < 1 MΩ	You need to check the insulation of the cable or PV string. Go to **Step 2**.

NOTE

You can prepare a tool to connect all PV– cables together using a conversion adapter and measure the ground insulation resistance of all PV– cables of an inverter at a time.

Figure 5-20 Measuring the insulation resistance of PV– for all PV strings

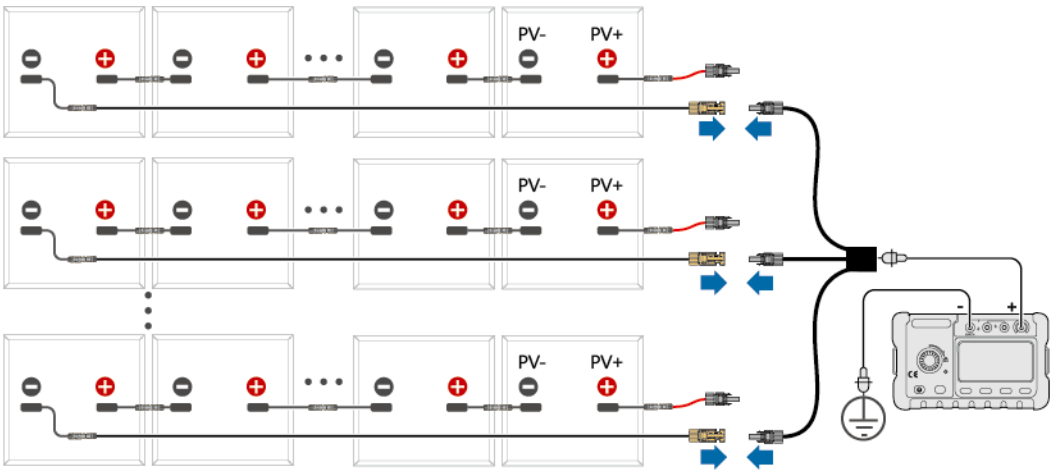

If...	Then...
Insulation resistance ≥ 1 MΩ	This is normal.
Insulation resistance < 1 MΩ	You need to check the insulation of the cables or PV strings.

Step 2 Disconnect the extension cable from the PV string. Connect the extension cable to the branch cable and use an insulation resistance tester to measure the insulation resistance of the extension cable to the ground. Add a maximum of 1500 V DC voltage between the cable and the ground, and check the insulation resistance.

Figure 5-21 Measuring the insulation resistance of the extension cable

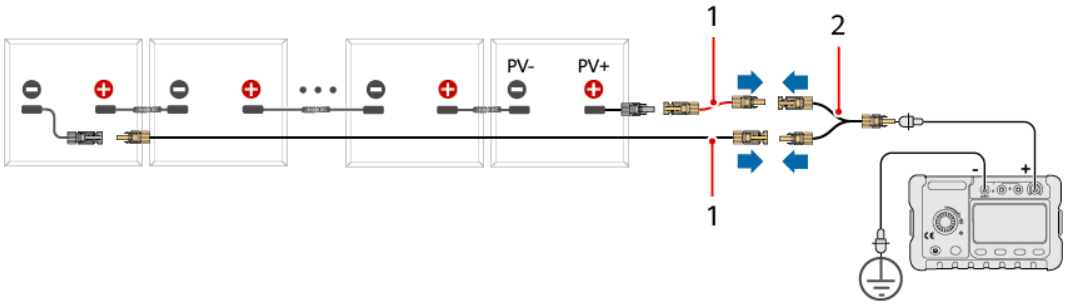

(1) Extension cable (2) Branch cable

 Copyright © Huawei Technologies Co., Ltd.

If...	Then...
Insulation resistance ≥ 1 MΩ	The extension cable is normal. Go to **Step 3**.
Insulation resistance < 1 MΩ	The extension cable is abnormal. Check the cable. After the check is completed, go to **Step 1** to check whether the PV string is normal. If the PV string is abnormal, go to **Step 3**.

Step 3 Measure the insulation resistance of the PV module. You are advised to consult the PV module manufacturer to determine whether the PV module is abnormal.

----End

5.5.3 Connecting Cables to Amphenol Helios H4 Terminals

CAUTION

Use the Amphenol Helios H4 positive and negative metal terminals and DC connectors delivered with the inverter. Using incompatible positive and negative metal terminals and DC connectors may result in serious consequences. The resulting device damage is not covered by the product warranty.

NOTICE

- You are advised to use the H4TC0003 (Amphenol) crimping tool and do not use it with the positioning block. Otherwise, the metal terminals may be damaged.
- The H4TW0001 (Amphenol) open-end wrench is recommended.
- Cables with high rigidity, such as armored cables, are not recommended as DC input power cables, because poor contact may be caused by the bending of the cables.
- Before assembling DC connectors, label the cable polarities correctly to ensure correct cable connections.
- After the positive and negative connectors snap into place, try to pull the DC input power cables back to check that they are secure.
- If optimizers are configured for PV strings, see the optimizer document.

Procedure

Step 1 Connect DC power cables.

 Copyright © Huawei Technologies Co., Ltd.

Figure 5-22 Connecting DC power cables

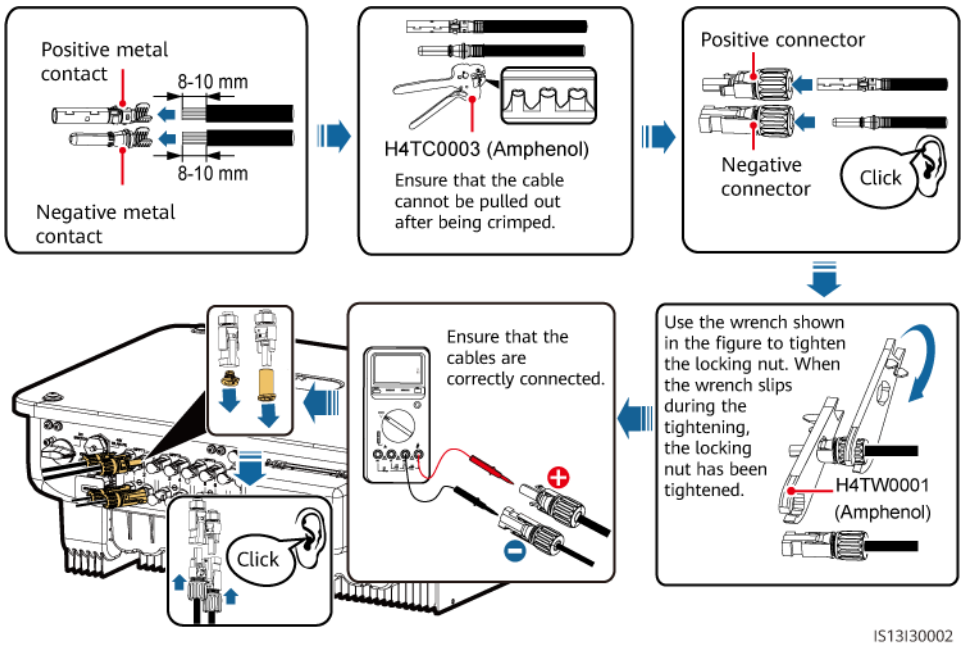

NOTICE

When installing DC input power cables, leave at least 150 mm of slack. The axial tension on PV connectors must not exceed 80 N. Radial stress or torque must not be generated on PV connectors.

Step 2 Use sealing plugs to seal the DC input terminals that are not connected to PV strings. Device damage caused by the absence of sealing plugs is not covered by warranty.

Figure 5-23 Sealing plugs

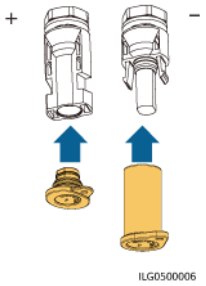

Table 5-3 Sealing plug models

PV+ Sealing Plug	PV– Sealing Plug
CT75A-FJB9-01	CT75A-FJB8-01
HH4SPM	HH4SPF
102-01-00064	102-01-00065

 Copyright © Huawei Technologies Co., Ltd.

PV+ Sealing Plug	PV– Sealing Plug
HY050-FCG-2	HY050-FCG-3

----End

5.5.4 Connecting Cables to Staubli MC4 Terminals

CAUTION

Use the Staubli MC4 positive and negative metal terminals and DC connectors delivered with the inverter. Using incompatible positive and negative metal terminals and DC connectors may result in serious consequences. The resulting device damage is not covered by the product warranty.

NOTICE

- You are advised to use the PV-CZM-22100 (Staubli) crimping tool and do not use it with the positioning block. Otherwise, the metal terminals may be damaged.
- The PV-MS (Staubli) or PV-MS-HZ (Staubli) open-end wrench is recommended.
- Cables with high rigidity, such as armored cables, are not recommended as DC input power cables, because poor contact may be caused by the bending of the cables.
- Before assembling DC connectors, label the cable polarities correctly to ensure correct cable connections.
- After the positive and negative connectors snap into place, try to pull the DC input power cables back to check that they are secure.
- If optimizers are configured for PV strings, see the optimizer document.

Procedure

Step 1 Connect DC power cables.

 Copyright © Huawei Technologies Co., Ltd.

Figure 5-24 Connecting DC power cables

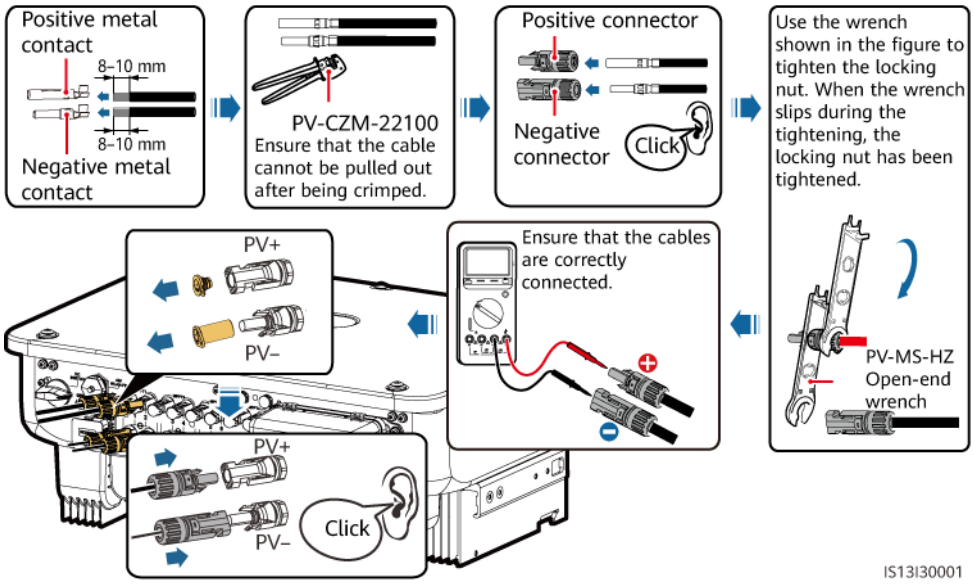

NOTICE

When installing DC input power cables, leave at least 150 mm of slack. The axial tension on PV connectors must not exceed 80 N. Radial stress or torque must not be generated on PV connectors.

Step 2 Use sealing plugs to seal the DC input terminals that are not connected to PV strings. Device damage caused by the absence of sealing plugs is not covered by warranty.

Figure 5-25 Sealing plugs

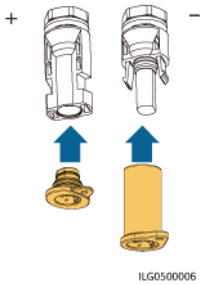

Table 5-4 Sealing plug models

PV+ Sealing Plug	PV– Sealing Plug
CT75A-FJB9-01	CT75A-FJB8-01
HH4SPM	HH4SPF
102-01-00064	102-01-00065
HY050-FCG-2	HY050-FCG-3

----End

5.6 (Optional) Installing the Smart Dongle

Procedure

NOTE

The Smart Dongle is not provided in standard configuration.

- 4G Smart Dongle

NOTICE

- If your Smart Dongle is not configured with a SIM card, you need to prepare one (dimensions: 25 mm x 15 mm; capacity: ≥ 64 KB).
- When installing the SIM card, determine its installation direction based on the silk screen and arrow on the card slot.
- Press the SIM card in place to lock it, indicating that the SIM card is correctly installed.
- When removing the SIM card, push it inward to eject it.
- When reinstalling the enclosure of the Smart Dongle, ensure that the snap-fits click into place.

Figure 5-26 Installing the 4G Smart Dongle (SDongleB-06)

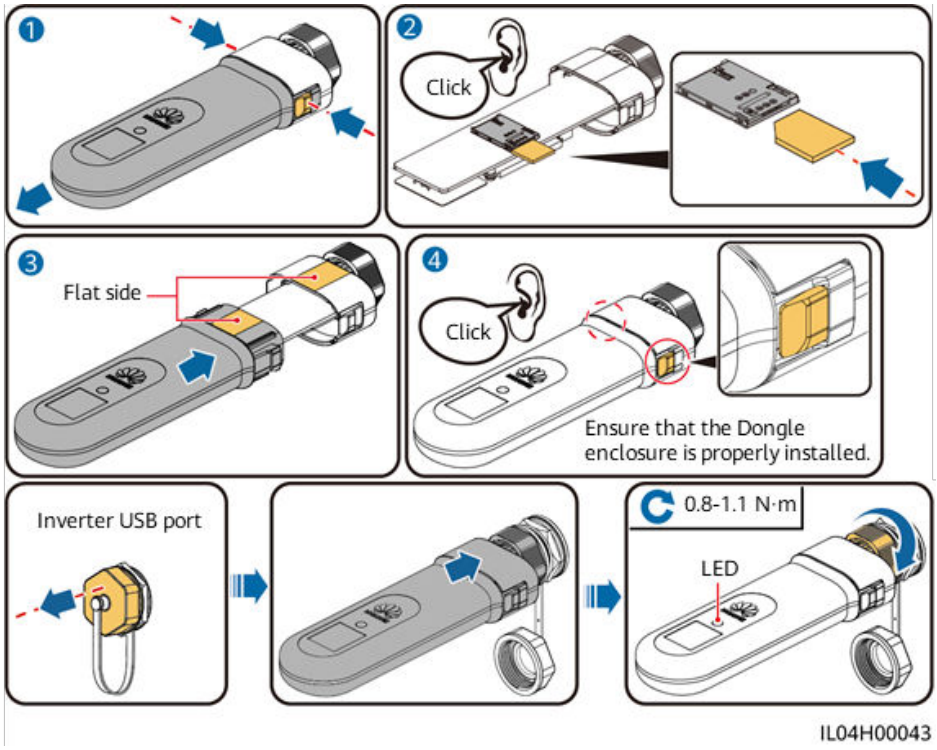

Copyright © Huawei Technologies Co., Ltd.

- WLAN-FE Smart Dongle (WLAN communication)

Figure 5-27 Installing the WLAN-FE Smart Dongle (WLAN communication)

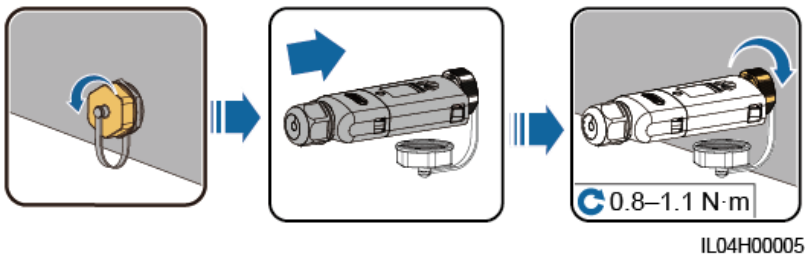

- WLAN-FE Smart Dongle (FE communication)

Figure 5-28 Installing the WLAN-FE Smart Dongle (FE communication)

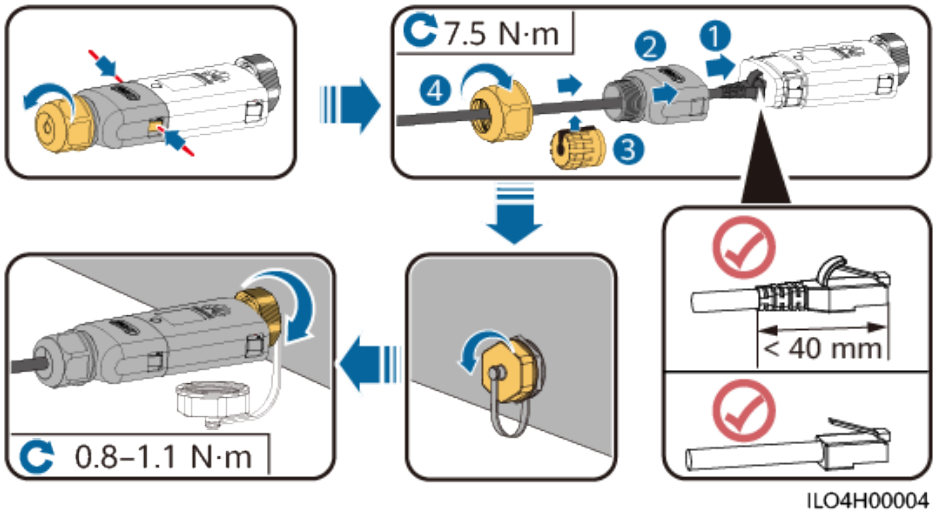

NOTICE

Install the network cable before installing the Smart Dongle on the inverter.

Copyright © Huawei Technologies Co., Ltd.

NOTE

- For details about how to use the WLAN-FE Smart Dongle SDongleA-05, see **SDongleA-05 Smart Dongle Quick Guide (WLAN-FE)**. You can scan the QR code below to obtain the document.
- For details about how to use the 4G Smart Dongle SDongleB-06, see **SDongleB-06 Smart Dongle Quick Guide (4G)**. You can scan the QR code below to obtain the document.

The quick guide is delivered with the Smart Dongle.

5.7 Connecting Signal Cables

COM Port Pin Definitions

NOTICE

When laying out signal cables, separate them from power cables and keep them away from strong interference sources to prevent communication interruption.

 Copyright © Huawei Technologies Co., Ltd.

Figure 5-29 Pin definitions

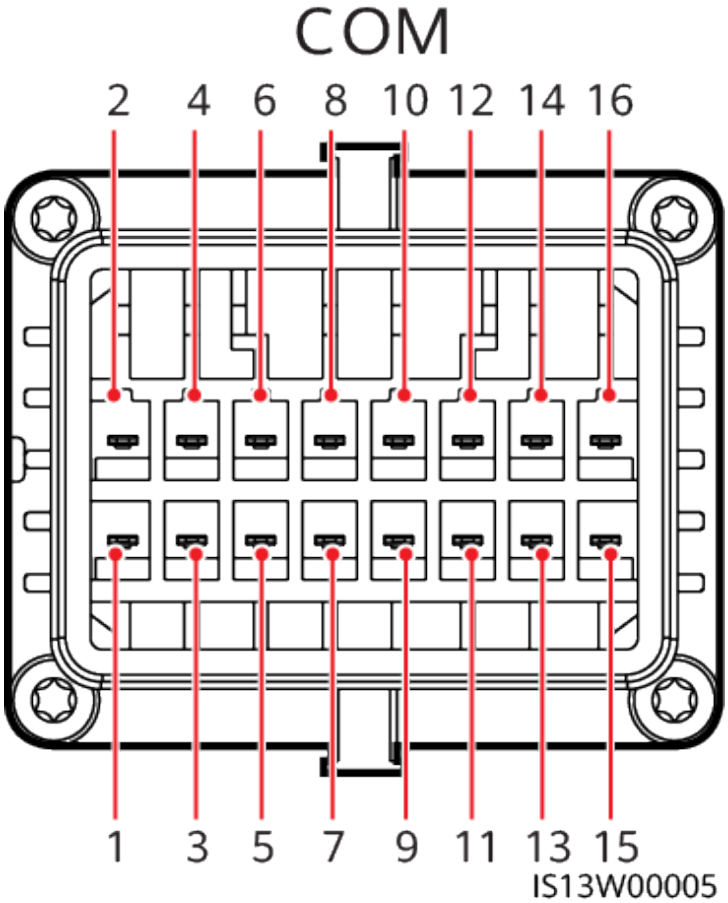

Pin	Definition	Function	Description	Pin	Definition	Function	Description
1	485A1_1	RS485 differential signal +	For inverter cascading or connecting to the RS485 signal port of a SmartLogger	2	485A1_2	RS485 differential signal +	For inverter cascading or connecting to the RS485 signal port of a SmartLogger
3	485B1_1	RS485 differential signal –		4	485B1_2	RS485 differential signal –	
5	PE	Shield layer grounding	-	6	PE	Shield layer grounding	-

Pin	Definition	Function	Description	Pin	Definition	Function	Description
7	485A2	RS485 differential signal +	For connecting to the RS485 signal port for controlling the power meter at the grid connection point.	8	DIN1	Dry contact for grid scheduling	-
9	485B2	RS485 differential signal –		10	DIN2		
11	-	-	-	12	DIN3		
13	GND	GND	-	14	DIN4		
15	DIN5	Rapid shutdown/NS protection	For the rapid shutdown DI signal or connecting to the signal cable of an NS protection device	16	GND		

Scenario Where No Signal Cable Is Connected

NOTICE

If no signal cable is connected to the inverter, use a waterproof plug to seal the cable hole of the signal cable connector and connect the signal cable connector to the communications port on the inverter for better waterproof performance.

Copyright © Huawei Technologies Co., Ltd.

Figure 5-30 Connecting the signal cable connector

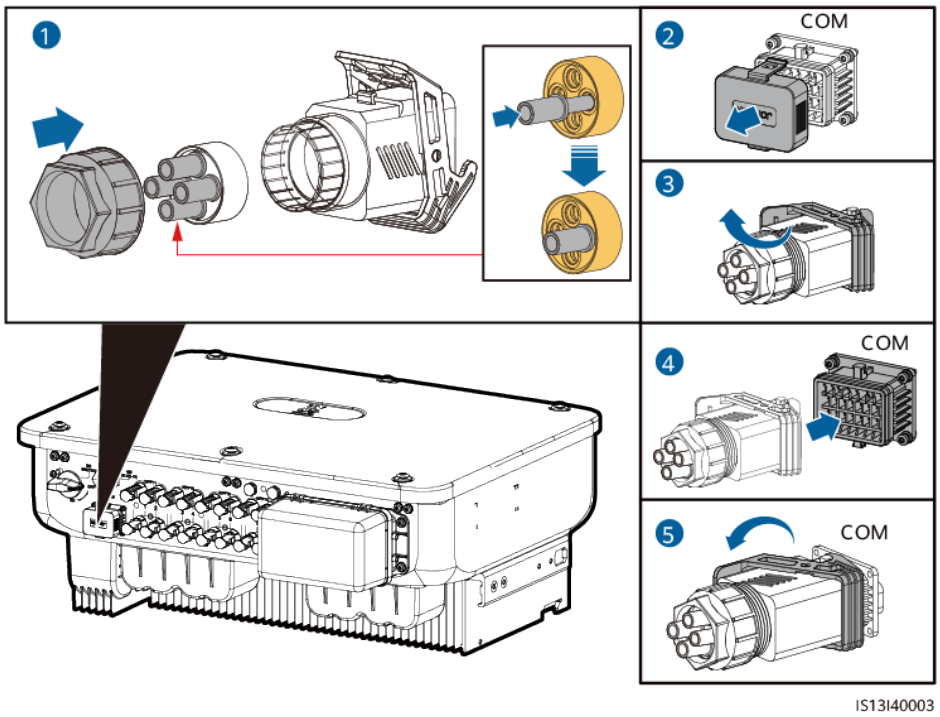

5.7.1 Communication Mode Description

The inverter is class B equipment of group 1 in RS485 networking or class A equipment of group 1 in MBUS networking.

NOTE

- Class A equipment: Class A equipment is the equipment suitable for use in all locations other than those allocated to residential environments and those directly connected to a low voltage power supply network which supplies buildings used for domestic purposes.
- Class B equipment: Equipment suitable for use in locations in residential environments and in establishments directly connected to a low voltage power supply network which supplies buildings used for domestic purposes.
- Group 1 equipment: Group 2 contains all industrial, scientific, and medical (ISM) RF equipment in which radio-frequency energy in the frequency range of 9 kHz to 400 GHz is intentionally generated and used or only used locally, in the form of electromagnetic radiation, inductive and/or capacitive coupling, for the treatment of material, for inspection/analysis purposes, or for transfer of electromagnetic energy. Group 1 contains all equipment which is not classified as group 2 equipment.

RS485 Communication

- Smart Dongle networking

Figure 5-31 Smart Dongle networking

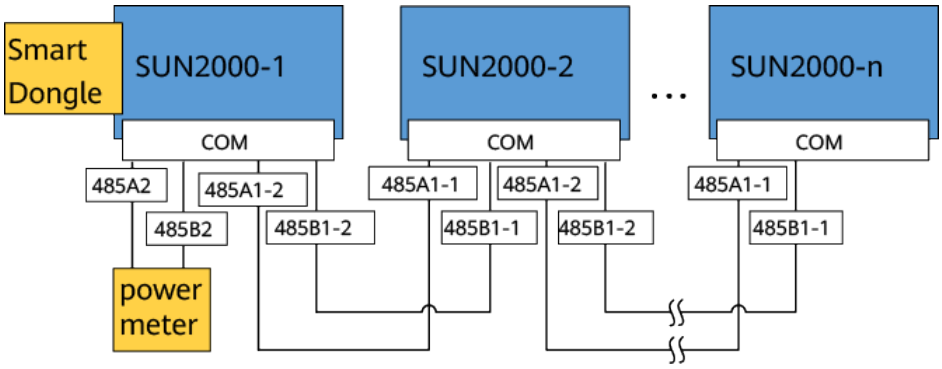

NOTE

- If the inverter is connected to the Smart Dongle, it cannot be connected to the SmartLogger.
- A maximum of 10 SUN2000s can be cascaded to the Smart Dongle.

- SmartLogger networking

Figure 5-32 SmartLogger networking

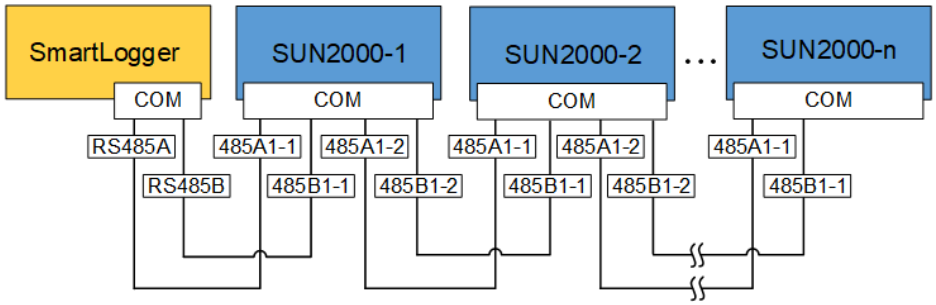

NOTE

- If the inverter is connected to the SmartLogger, it cannot be connected to the Smart Dongle.
- You are advised to connect fewer than 30 devices to each RS485 route.
- If the SmartLogger3000 is used, the RS485 communication distance between the SUN2000 at the end and the SmartLogger must be less than or equal to 1000 m (baud rate: 9600 bit/s).
- If the SmartLogger5000B or SmartMGC5000B is used, the RS485 communication distance between the SUN2000 at the end and the SmartLogger must be as follows:
  - ≤ 1000 m (baud rate: 9600 bit/s)
  - ≤ 500 m (baud rate: 38400 bit/s)

MBUS Communication

The MBUS technology transmits communication signals over power cables through a communications board.

WARNING

In MBUS communication scenarios, this equipment is not intended for use in residential environments and may not provide adequate protection to radio reception in such environments.

NOTICE

- The MBUS communication is applicable to medium-voltage grid connection scenarios or non-low-voltage public grid connection scenarios (industrial environment).
- In MBUS communication scenarios, this equipment must be connected to a dedicated step-up transformer or isolation transformer instead of connecting to low-voltage overhead power lines, and be physically separated from residential environments or radio receivers by distance greater than 30 m.

NOTICE

- The built-in MBUS module in the inverter does not need to be connected with cables.
- In utility-scale scenarios, an isolation transformer must be connected between the inverter and loads.
- C&I scenarios are supported only in China.
- In the MBUS communication scenario, if the SmartLogger3000 is used, you are advised to use multi-core cables with the maximum communication distance of 1000 m. To use other types of AC power cables, contact local technical support.
- In the MBUS communication scenario, if the SmartLogger5000B or SmartMGC5000B is used, use multi-core cables with the maximum communication distance of 500 m. To use other types of AC power cables, contact local technical support.

 Copyright © Huawei Technologies Co., Ltd.

Figure 5-33 MBUS communication (utility-scale scenario)

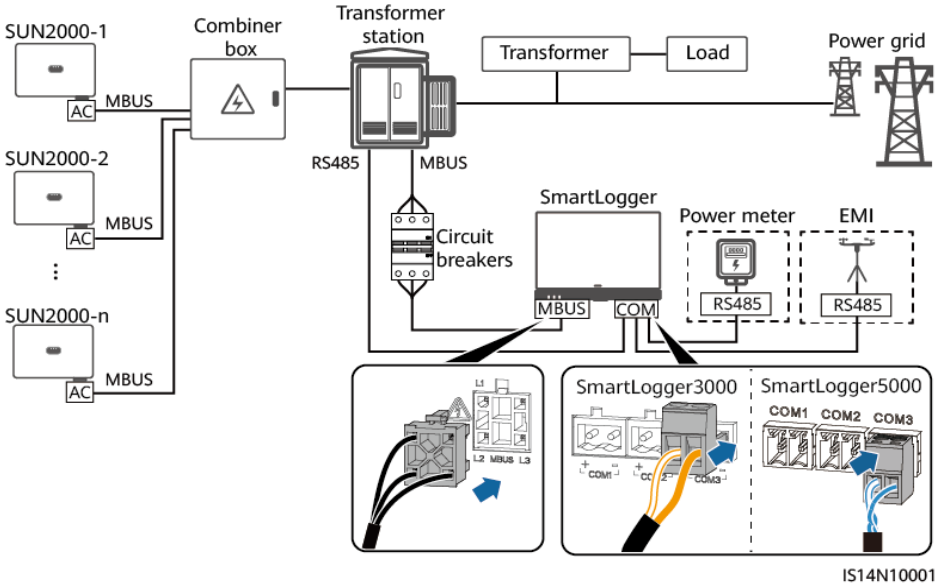

Figure 5-34 MBUS communication (C&I scenario in China)

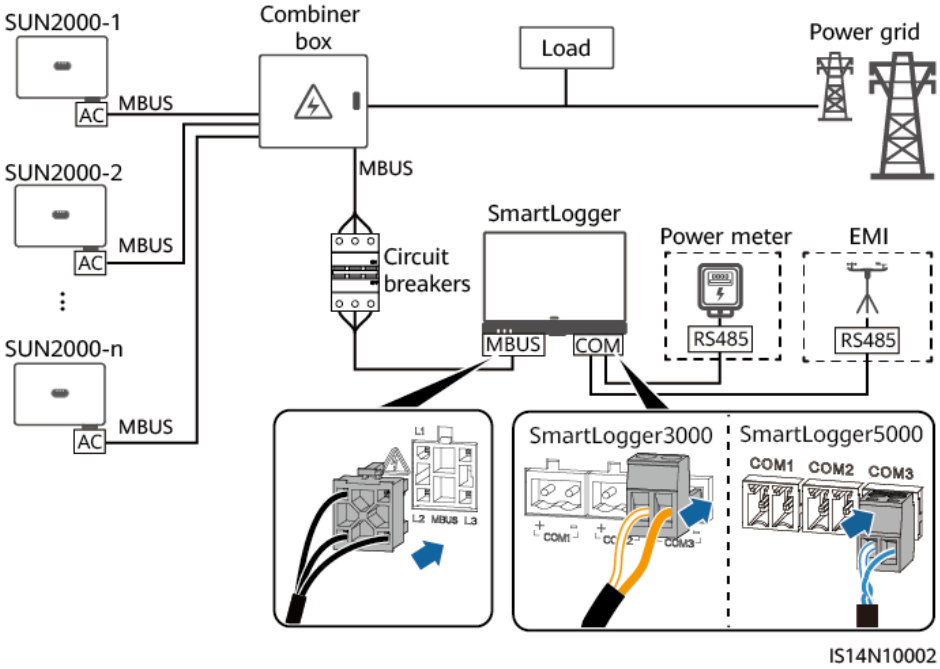

5.7.2 (Optional) Connecting the RS485 Communications Cables to the Inverter

Procedure

Step 1 Connect the signal cables to the signal cable connector.

 Copyright © Huawei Technologies Co., Ltd.

Figure 5-35 Installing the cables

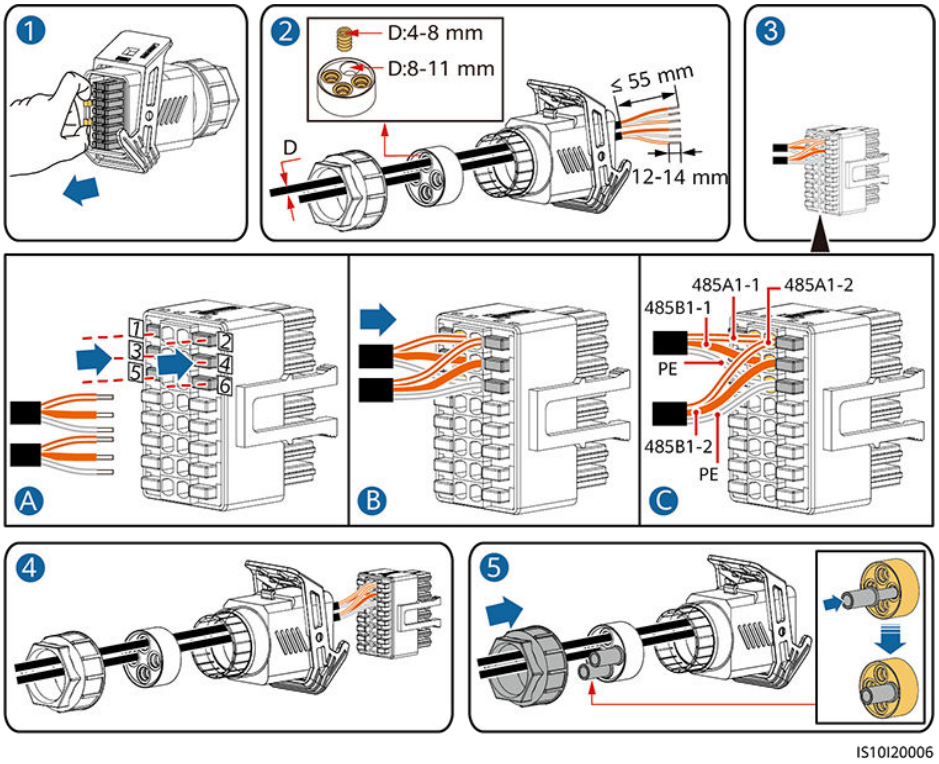

Step 2 Connect the signal cable connectors to the COM port.

Figure 5-36 Securing the signal cable connector

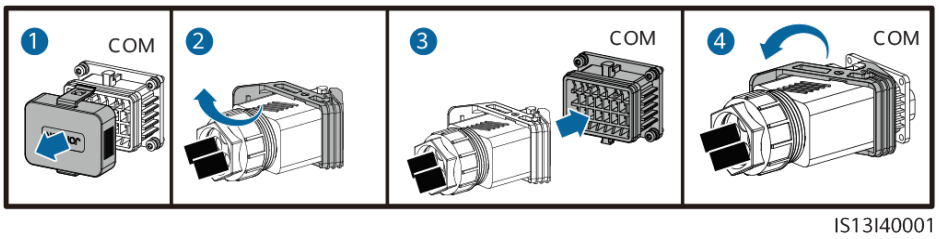

----End

5.7.3 (Optional) Connecting the RS485 Communications Cable to the Power Meter

Procedure

Step 1 Connect the signal cable to the signal cable connector.

 Copyright © Huawei Technologies Co., Ltd.

Figure 5-37 Installing the cable

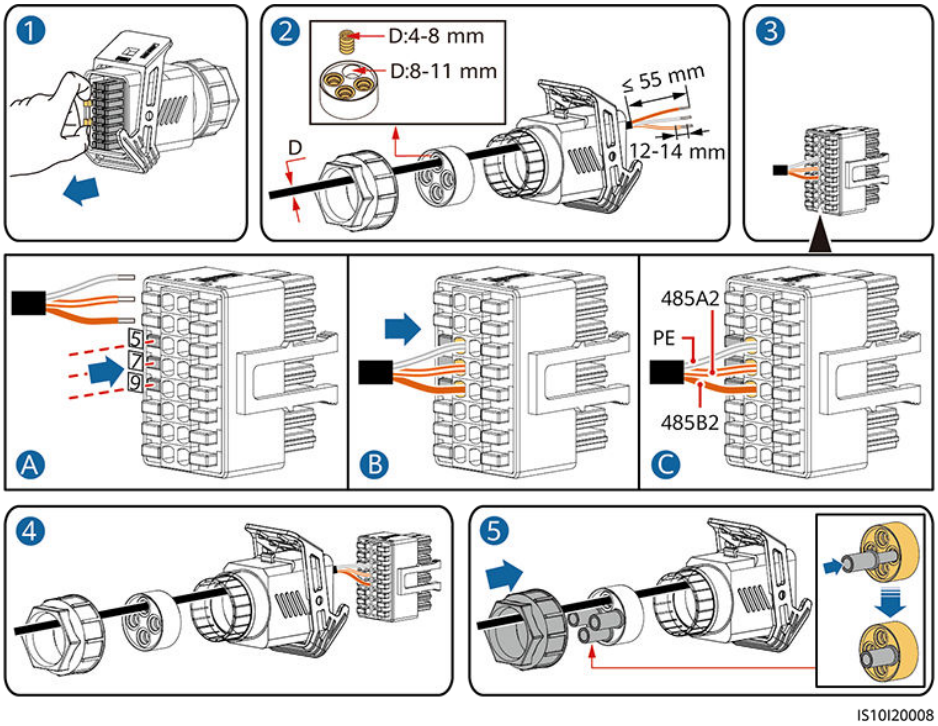

Step 2 Connect the signal cable connector to the COM port.

Figure 5-38 Securing the signal cable connector

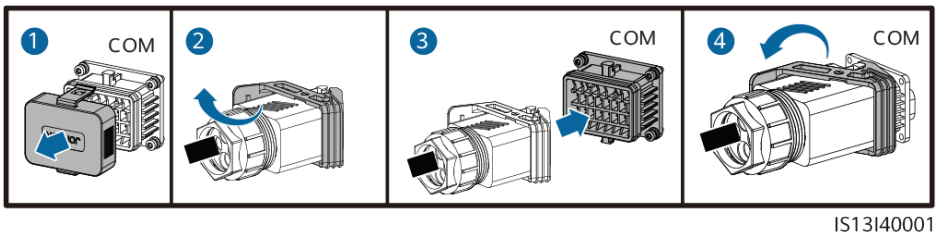

----End

5.7.4 (Optional) Connecting the Power Grid Scheduling Signal Cable

Procedure

Step 1 Connect the signal cable to the signal cable connector.

 Copyright © Huawei Technologies Co., Ltd.

Figure 5-39 Installing the cable

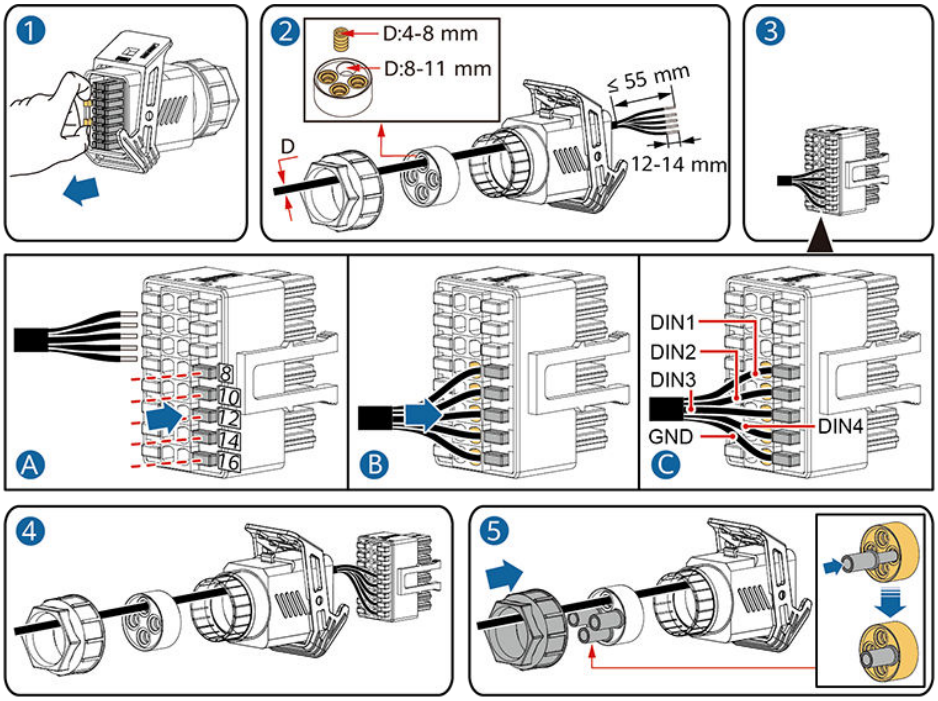

Step 2 Connect the signal cable connector to the COM port.

Figure 5-40 Securing the signal cable connector

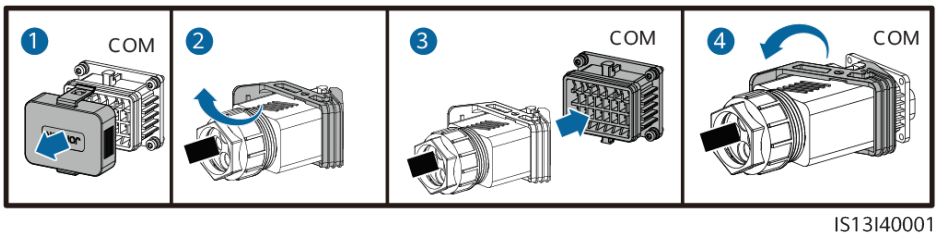

----End

5.7.5 (Optional) Connecting the Rapid Shutdown Signal Cable

Procedure

Step 1 Connect the signal cable to the signal cable connector.

 Copyright © Huawei Technologies Co., Ltd.

Figure 5-41 Installing the cable

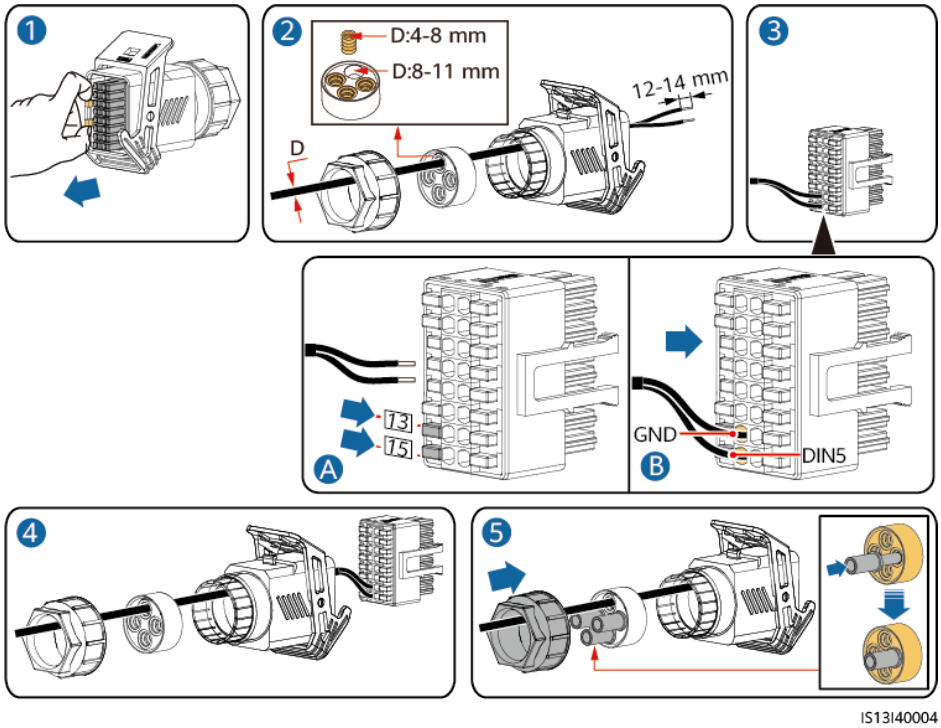

Step 2 Connect the signal cable connector to the COM port.

Figure 5-42 Securing the signal cable connector

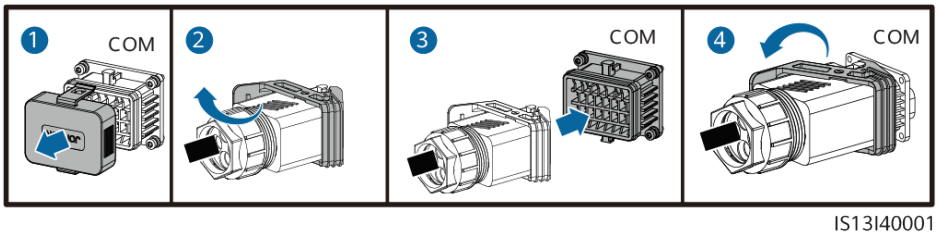

----End

 Copyright © Huawei Technologies Co., Ltd.

6 Commissioning

DANGER

- Wear personal protective equipment and use dedicated insulated tools to avoid electric shocks or short circuits.

NOTICE

Before the equipment is put into operation for the first time, ensure that the parameters are set correctly by professional personnel. Incorrect parameter settings may result in noncompliance with local grid connection requirements and affect the normal operations of the equipment.

6.1 Checking Before Power-On

Table 6-1 Checklist

No.	Check Item	Acceptance Criteria
1	SUN2000 installation	The SUN2000 is installed correctly and securely.
2	Smart Dongle	The Smart Dongle is installed correctly and securely.
3	Cable routing	The cables are routed properly as required by the customer.
4	Cable ties	Cable ties are evenly distributed and no burr exists.
5	Reliable grounding	The PE cable is connected correctly and securely.

 Copyright © Huawei Technologies Co., Ltd.

No.	Check Item	Acceptance Criteria
6	Switch	DC switches and all the switches connecting to the SUN2000 are OFF.
7	Cable connection	The AC output power cable, and DC input power cables are connected correctly and securely.
8	Unused terminals and ports	Unused terminals and ports are locked by watertight caps.
9	Installation environment	The installation space is proper, and the installation environment is clean and tidy.

6.2 System Power-On

Prerequisites

DANGER

- Wear personal protective equipment and use dedicated insulated tools to avoid electric shocks or short circuits.

NOTICE

- Before turning on the AC switch between the inverter and the power grid, check that the AC voltage is within the specified range using a multimeter.
- If the DC power supply is connected but the AC power supply is disconnected, the inverter will report a **Grid Loss** alarm. The inverter can start properly only after the power grid recovers.

Procedure

Step 1 Turn on the AC switch between the inverter and the power grid.

Step 2 (Optional) Remove the locking screw next to the DC SWITCH.

 Copyright © Huawei Technologies Co., Ltd.

Figure 6-1 Removing the DC SWITCH locking screw

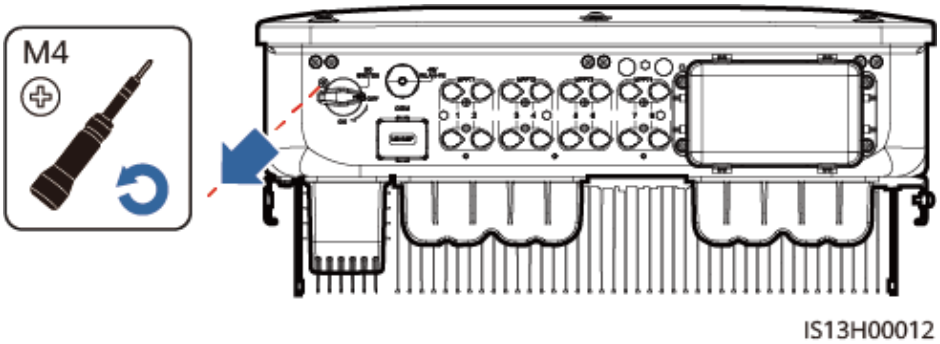

Step 3 Turn on the **DC SWITCH** at the bottom of the inverter.

Step 4 Observe the LED indicators to check the operating status of the inverter.

Table 6-2 LED indicator description

Category	Status		Description
Running indicator 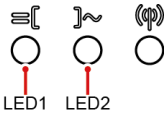	**LED1**	**LED2**	–
	Steady green	Steady green	The inverter is running in on-grid state.
	Blinking green slowly (on for 1s and off for 1s)	Off	The DC is on and the AC is off.
	Blinking green slowly (on for 1s and off for 1s)	Blinking green slowly (on for 1s and off for 1s)	Both the DC and AC are on, and the inverter is off-grid.
	Off	Blinking green slowly	The DC is off and the AC is on.
	Off	Off	Both the DC and AC are off.
	Blinking red fast (on for 0.2s and off for 0.2s)	–	There is a DC environmental alarm.
	–	Blinking red fast (on for 0.2s and off for 0.2s)	There is an AC environmental alarm.
	Steady red	Steady red	A fault exists.
Communication indicator 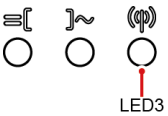	**LED3**		–
	Blinking green fast (on for 0.2s and off for 0.2s)		Communication is in progress.

 Copyright © Huawei Technologies Co., Ltd.

Category	Status	Description
	Blinking green slowly (on for 1s and off for 1s)	A mobile phone is connected to the inverter.
	Off	There is no communication.
Note: If LED1, LED2, and LED3 are steady red, the inverter is faulty and needs to be replaced.		

----End

6.3 Creating a Plant

6.3.1 Downloading and Installing the App

- You are advised to use an app to access the management system. You can scan the QR code below to download the app. You are advised to use a browser to scan the QR code.
- If the preceding app cannot be used, use the SUN2000 app for commissioning. You can scan the QR code below to download the app. You are advised to use a browser to scan the QR code.

6.3.2 Registering an Installer Account

For details about how to create the first **Installer** account, see section "Registering the Company's First Installer Account" in the app user manual.

For details about how to create multiple **Installer** accounts for the same company, see section "Registering an Owner Account or Another Installer Account" in the app user manual.

6.3.3 Quick Settings

Step 1 Log in to the app as **Installer**, tap **Setup wizard** on the **Home** screen, scan the QR code on the device, and follow the instructions to connect to the device WLAN.

Figure 6-2 Logging in to the app

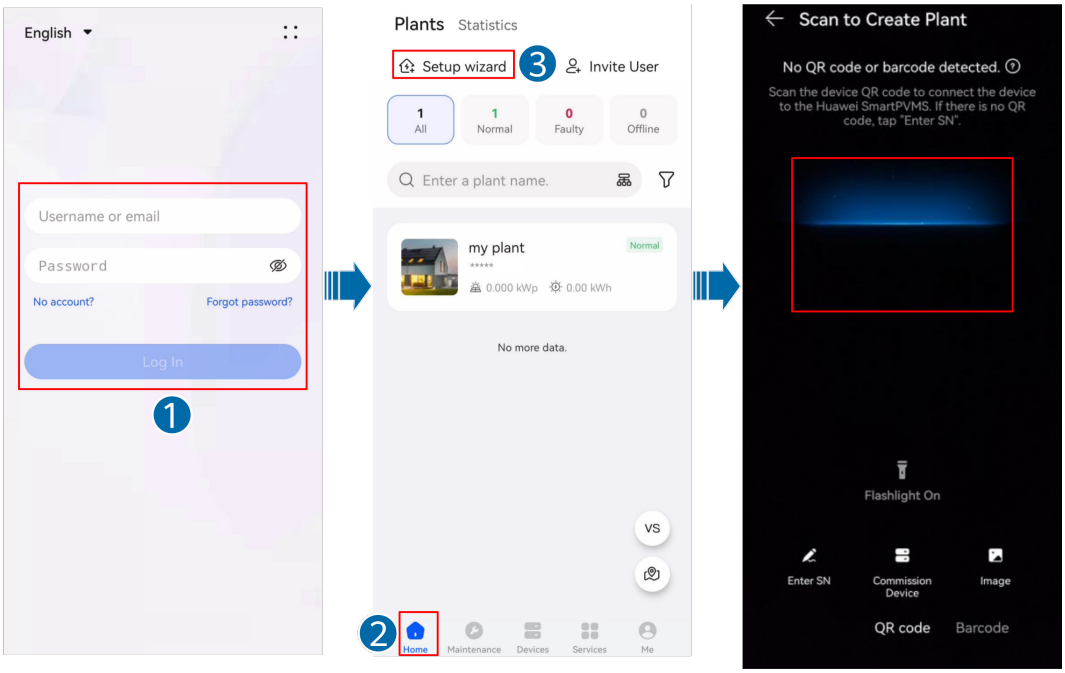

NOTE

- Before tapping **Setup wizard**, ensure that the app is connected to the Internet. If the network connection is abnormal, QR code scanning may fail. In this case, perform operations as prompted on the app.
- If SmartLogger networking is adopted, scan the QR code on the SmartLogger to connect to the device WLAN as prompted.
- If Smart Dongle networking is adopted, scan the QR code on the master inverter to connect to the device WLAN as prompted.
- If the inverter has a built-in WLAN, the WLAN of the Smart Dongle is disabled by default. If the inverter does not have a WLAN, the WLAN of the Smart Dongle is enabled by default.
- If the WLAN of the Smart Dongle is disabled, log in to the app and tap the plant name on the **Home** screen to access the plant screen. Choose **Devices**, tap the Smart Dongle name, choose **O&M Authorization** > **WLAN wakeup**, and tap **OK** to enable the WLAN of the Smart Dongle.

Copyright © Huawei Technologies Co., Ltd.

NOTE

- The WLAN name of a device consists of "Device name-Device SN." (The last six digits of the WLAN names of some devices are the same as the last six digits of the device SNs.)
- For the first-time connection, log in with the initial password. You can obtain the initial WLAN password from the device label, that is, the characters following "Password (or PSW)". If the device label does not contain the "Password (or PSW)" field, the initial password is **Changeme**.
- Ensure account security by changing the password periodically. Your password might be stolen or cracked if it is left unchanged for extended periods. If a password is lost, the device cannot be accessed. In these cases, the Company shall not be liable for any loss.
- If the login screen is not displayed after you scan the QR code, check whether your phone is correctly connected to the device WLAN. If not, manually select and connect to the WLAN.
- If **This WLAN network has no Internet access. Connect anyway?** message is displayed when you connect to the built-in WLAN, tap **CONNECT**. Otherwise, you cannot log in to the system. The actual UI and messages may vary with mobile phones.

Step 2 Log in to the local commissioning screen as **Installer** and access **Quick Settings**.

NOTE

- Set the login password as prompted at the first login.
- To ensure account security, protect the login password by changing it periodically, and keep it secure.

Figure 6-3 Home screen for local commissioning

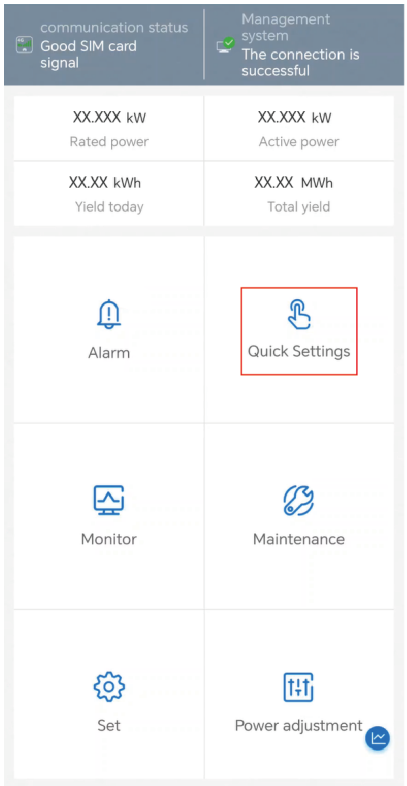

Step 3 Perform deployment and commissioning according to the **Quick Settings** process.

Figure 6-4 Basic parameters (using SmartLogger5000B networking as an example)

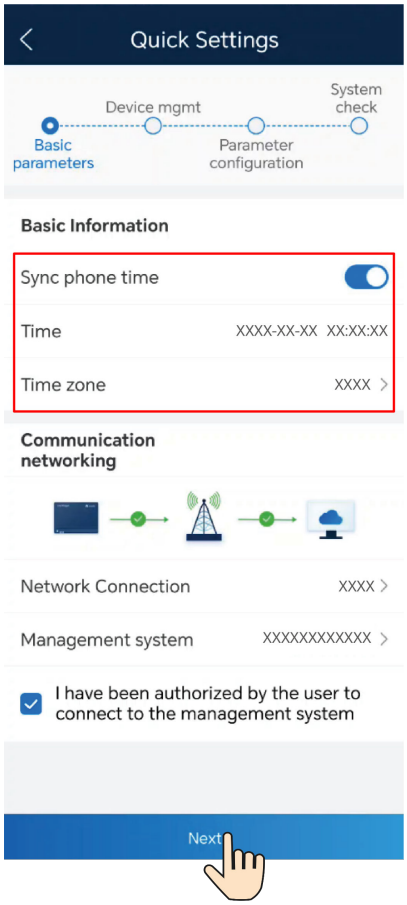

Table 6-3 Quick settings

Parameter	Description
Basic parameters	Set **Basic Information** based on the region.
Device mgmt	• Huawei-developed devices, such as the inverter, can be automatically detected and do not need to be configured. Check whether the number and model of devices are consistent with the actual situation. • Auto discovery does not apply to third-party devices. You need to tap **+** to add them manually. • In the SmartLogger3000A, SmartLogger3000B, SmartLogger5000B, or SmartMGC5000B networking scenario, if the inverter is networked through MBUS, tap **MBUS whitelist** to set the inverter SN list.
Parameter configuration	Set **Grid code** based on the region. For details about **Grid code**, see Grid Codes.

Parameter	Description
System check	After the current screen is displayed, the system automatically checks **Networking state**, **Alarm status**, and **Device status**. After the check is complete, you can tap **Check Again** to perform the check again.

NOTE

- In **Quick Settings**, **Grid code** is **N/A** by default (automatic startup is not supported). Set **Grid code** based on the region where the plant is located.
- Before the equipment is put into operation for the first time, ensure that the parameters are set correctly by professional personnel. Incorrect parameter settings may result in noncompliance with local grid connection requirements and affect the normal operations of the device.

Step 4 Tap **Next** and connect devices to a plant as prompted.

----End

6.3.4 Creating a Plant

For details, see the section about connecting to a plant in the app user manual.

6.3.5 Registering an Owner Account

For details, see section "Registering an Owner Account or Another Installer Account" in the app user manual.

6.4 Setting Function and Feature Parameters

6.4.1 Grid-tied Point Control

Function

The output power of the PV power system can be limited or reduced to ensure that the output power is within the specified range.

Procedure

Step 1 On the home screen, choose **Power adjustment** > **Grid-tied point control**.

Figure 6-5 Grid-tied point control

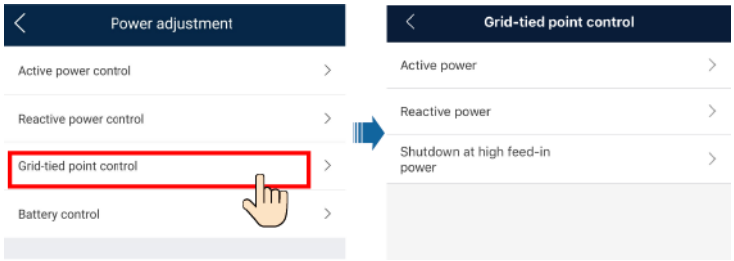

Table 6-4 Grid-tied point control

Parameter			Description
Active power	Unlimited	-	If this parameter is set to **Unlimited**, the output power of the inverter is not limited and the inverter can connect to the power grid at the rated power.
	Grid connection with zero power	Closed-loop controller	• If multiple inverters are cascaded, set this parameter to **Controller**. • If there is only one inverter, set this parameter to **Inverter**.
		Limitation mode	• **Total power** indicates export limitation of the total power at the grid-tied point. (When a single-phase power meter is connected, only **Total power** can be selected. When a three-phase meter is connected in three-phase three-wire mode, only **Total power** can be selected.) • **Single-phase power** indicates export limitation of the power in each phase at the grid-tied point. **Single-phase power** can be selected only if a three-phase meter is connected in three-phase four-wire mode.
		Power adjustment period	Specifies the shortest interval for a single export limitation adjustment.
		Power control hysteresis	Specifies the deadband for adjusting the inverter output power. If the power fluctuates within the power control hysteresis, the power is not adjusted.
		Active power output limit for fail-safe	Specifies the derating value of the inverter active power by percentage. If the Smart Dongle does not detect any power meter data or the communication between the Smart Dongle and the inverter is disconnected, the Smart Dongle delivers the derating value of the inverter active power by percentage.
		Communication disconnection fail-safe	In the inverter export limitation scenario, if this parameter is set to **Enable**, the inverter will derate according to the active power derating percentage when the communication between the inverter and the Smart Dongle is disconnected for a period longer than **Communication disconnection detection time**.
		Communication disconnection detection time	Specifies the fail-safe detection time in case of disconnection between the inverter and the Smart Dongle. This parameter is displayed when **Communication disconnection fail-safe** is set to **Enable**.

 Copyright © Huawei Technologies Co., Ltd.

Parameter			Description
	Grid connection with limited power (kW)	Closed-loop controller	• If multiple inverters are cascaded, set this parameter to **Controller**. • If there is only one inverter, set this parameter to **Inverter**.
		Limitation mode	• **Total power** indicates export limitation of the total power at the grid-tied point. (When a single-phase power meter is connected, only **Total power** can be selected. When a three-phase meter is connected in three-phase three-wire mode, only **Total power** can be selected.) • **Single-phase power** indicates export limitation of the power in each phase at the grid-tied point. **Single-phase power** can be selected only if a three-phase meter is connected in three-phase four-wire mode.
		Maximum grid feed-in power	Specifies the maximum active power transmitted from the grid-tied point to the power grid.
		Power adjustment period	Specifies the shortest interval for a single export limitation adjustment.
		Power control hysteresis	Specifies the deadband for adjusting the inverter output power. If the power fluctuates within the power control hysteresis, the power is not adjusted.
		Active power output limit for fail-safe	Specifies the derating value of the inverter active power by percentage. If the Smart Dongle does not detect any power meter data or the communication between the Smart Dongle and the inverter is disconnected, the Smart Dongle delivers the derating value of the inverter active power by percentage.
		Communication disconnection fail-safe	In the inverter export limitation scenario, if this parameter is set to **Enable**, the inverter will derate according to the active power derating percentage when the communication between the inverter and the Smart Dongle is disconnected for a period longer than **Communication disconnection detection time**.
		Communication disconnection detection time	Specifies the fail-safe detection time in case of disconnection between the inverter and the Smart Dongle. This parameter is displayed when **Communication disconnection fail-safe** is set to **Enable**.

 Copyright © Huawei Technologies Co., Ltd.

Parameter			Description
	Grid connection with limited power (%)	Closed-loop controller	• If multiple inverters are cascaded, set this parameter to **Controller**. • If there is only one inverter, set this parameter to **Inverter**.
		Limitation mode	• **Total power** indicates export limitation of the total power at the grid-tied point. (When a single-phase power meter is connected, only **Total power** can be selected. When a three-phase meter is connected in three-phase three-wire mode, only **Total power** can be selected.) • **Single-phase power** indicates export limitation of the power in each phase at the grid-tied point. **Single-phase power** can be selected only if a three-phase meter is connected in three-phase four-wire mode.
		PV plant capacity	Specifies the total maximum active power in the inverter cascading scenario.
		Maximum grid feed-in power	Specifies the percentage of the maximum active power at the grid-tied point to the PV plant capacity.
		Power adjustment period	Specifies the shortest interval for a single export limitation adjustment.
		Power control hysteresis	Specifies the deadband for adjusting the inverter output power. If the power fluctuates within the power control hysteresis, the power is not adjusted.
		Active power output limit for fail-safe	Specifies the derating value of the inverter active power by percentage. If the Smart Dongle does not detect any power meter data or the communication between the Smart Dongle and the inverter is disconnected, the Smart Dongle delivers the derating value of the inverter active power by percentage.
		Communication disconnection fail-safe	In the inverter export limitation scenario, if this parameter is set to **Enable**, the inverter will derate according to the active power derating percentage when the communication between the inverter and the Smart Dongle is disconnected for a period longer than **Communication disconnection detection time**.
		Communication disconnection detection time	Specifies the fail-safe detection time in case of disconnection between the inverter and the Smart Dongle. This parameter is displayed when **Communication disconnection fail-safe** is set to **Enable**.

 Copyright © Huawei Technologies Co., Ltd.

Parameter		Description
Shutdown at high feed-in power[a]	Shutdown at high feed-in power	• The default value is **Disable**. • If this parameter is set to **Enable**, the inverter shuts down for protection when the power at the grid-tied point exceeds the threshold and remains in this condition for the specified time threshold.
	Upper feed-in power threshold for inverter shutdown (kW)	The default value is **0**. This parameter specifies the power threshold of the grid-tied point for triggering inverter shutdown.
	High feed-in power duration threshold for triggering inverter shutdown (s)	The default value is **20**. This parameter specifies the duration threshold of high feed-in power for triggering inverter shutdown. • When **High feed-in power duration threshold for triggering inverter shutdown** is set to **5**, **Shutdown at high feed-in power** takes precedence. • When **High feed-in power duration threshold for triggering inverter shutdown** is set to **20**, **Grid connection with limited power** takes precedence (when **Active power control** is set to **Grid connection with limited power**).
Note a: This parameter is supported only for the AS4777 or G99-TYPEA-LV grid code.		

----End

6.4.2 Setting Feed-in at Limited Current

Function

The output current of the PV power system can be limited or reduced to ensure that the output current is within the specified range.

This function applies only to the commercial and industrial (C&I) scenarios in the UK where the grid code is G99-TYPEA-LV, G99-TYPEB-LV, G99-TYPEB-HV, G99-TYPEB-HV-MV480, or G99-TYPEA-HV. The SUN2000 app version must be later than 6.24.00.563.

6.4.2.1 Connecting the App to the Inverter or Smart Dongle

NOTICE

If a single inverter is connected to the power grid, a Smart Dongle must be used for networking.

 Copyright © Huawei Technologies Co., Ltd.

Procedure

Step 1 On the home screen, choose **Power adjustment** > **Feed-in at limited current**.

Figure 6-6 Feed-in at limited current

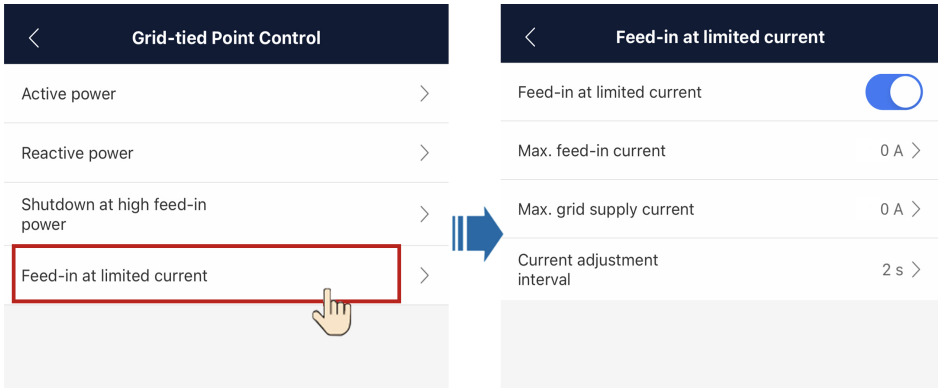

Table 6-5 Feed-in at limited current

Parameter		Description
Feed-in at limited current[a]	Feed-in at limited current	The default value is **Disable**. • If this parameter is set to **Disable**, feed-in at limited current will be unavailable. • If this parameter is set to **Enable**, feed-in at limited current will be available.
	Max. feed-in current[b]	Value range: [0, 30000 A] • Due to external disturbances, the feed-in current may exceed the specified value by 2%. In this case, the inverter will adjust the current to a value within the range limit. • After the user changes the maximum feed-in current, the inverter will adjust the current to a value within the range limit.
	Max. grid supply current	Value range: [0, 30000 A] If the grid supply current exceeds the specified value by 2%, the inverter will adjust the current to a value within the range limit.
	Current adjustment interval	Value range: [1, 5s] You are advised to keep the default value. A larger value indicates a lower current adjustment speed. If this parameter is set to 2s and the current at the grid connection point exceeds the threshold, the inverter adjusts the current every 2s.

 Copyright © Huawei Technologies Co., Ltd.

Parameter	Description
Note a: If the inverter shuts down because the feed-in current adjustment is not complete within the specified time, the user needs to manually start the inverter. By default, the number of manual startups cannot exceed three within 30 days. If this limit is reached, it is not allowed to manually start the inverter again. Note b: If the maximum feed-in current is not adjusted to a value within the range limit within 15s, the inverter will shut down and report a **Power Control Abnormal at Grid Connection Point** alarm.	

----End

6.4.2.2 Scenario Where the App Connects to the SmartLogger

NOTICE

- If multiple inverters are cascaded, the SmartLogger must be used.
- SmartLogger: SmartLogger3000

Procedure

Step 1 On the home screen, choose **Power adjustment > Feed-in at limited current**.

Figure 6-7 Feed-in at limited current

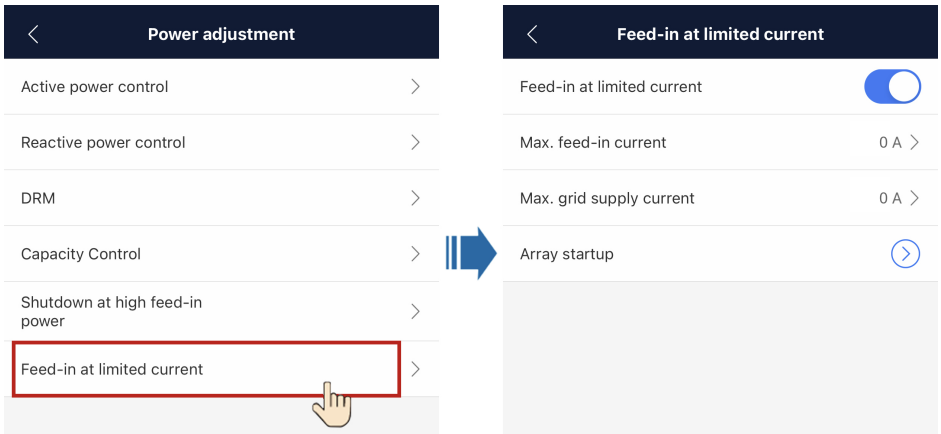

Table 6-6 Feed-in at limited current

Parameter		Description
Feed-in at limited current[a]	Feed-in at limited current	The default value is **Disable**. • If this parameter is set to **Disable**, feed-in at limited current will be unavailable. • If this parameter is set to **Enable**, feed-in at limited current will be available.

Parameter		Description
	Max. feed-in current[b]	Value range: [0, 30000 A] ● Due to external disturbances, the feed-in current may exceed the specified value by 2%. In this case, the inverter will adjust the current to a value within the range limit. ● After the user changes the maximum feed-in current, the inverter will adjust the current to a value within the range limit.
	Max. grid supply current	Value range: [0, 30000 A] If the grid supply current exceeds the specified value by 2%, the inverter will adjust the current to a value within the range limit.
	Array startup	If devices in the array shut down because the feed-in current at the grid connection point is not complete, you can start all inverters in the array by one click.
Note a: If the inverter shuts down because the feed-in current adjustment is not complete within the specified time, the user needs to manually start the inverter. By default, the user needs to wait for at least 4 hours before starting the inverter. Note b: If the maximum feed-in current is not adjusted to a value within the range limit within 15s, the inverter will shut down and report a **Power Control Abnormal at Grid Connection Point** alarm.		

----End

NOTICE

- In SmartLogger networking, multiple inverters can be cascaded.
- SmartLogger: SmartLogger5000B or SmartMGC5000B

Procedure

1. On the home screen, choose **Power adjustment** > **Capacity Control** and perform operations as required.

 Copyright © Huawei Technologies Co., Ltd.

Figure 6-8 Feed-in at limited current

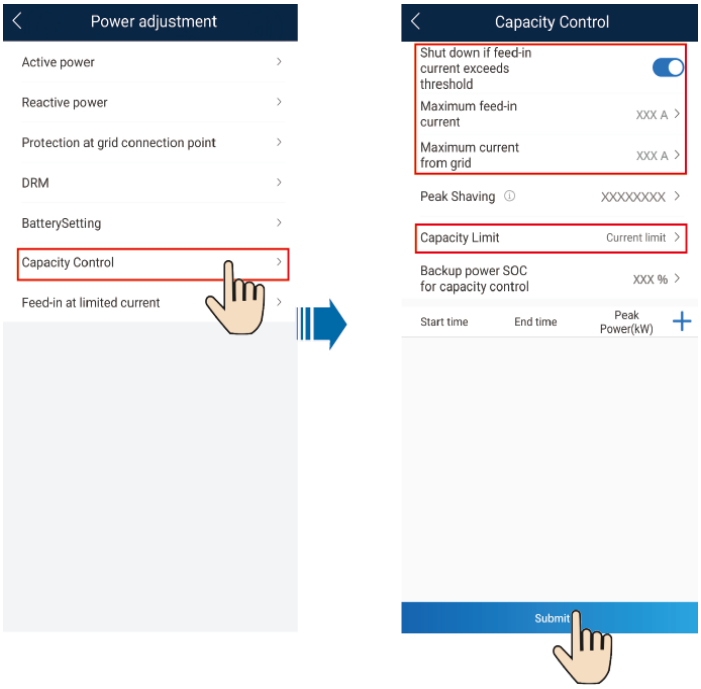

Table 6-7 Capacity control

Parameter	Description	Remarks
Capacity Limit	• **No Control**: disables this function. • **Current limit**: The current of electricity purchased from or sold to the grid cannot exceed the preset current limit.	-
Maximum feed-in current (A)		This parameter is displayed when **Capacity Limit** is set to **Current limit**.
Maximum current from grid (A)		
Shut down if feed-in current exceeds threshold	After this parameter is enabled, the array will be forcibly shut down for 4 hours if the feed-in current exceeds the threshold. You are advised to use this parameter following the UK's G100 standard. **NOTE** If the inverter shuts down because the feed-in current adjustment is not complete within the specified timeframe, the user needs to manually start the inverter. By default, the user needs to wait for at least 4 hours before manually starting the inverter.	This parameter is displayed when **Capacity Limit** is set to **Current limit**.

 Copyright © Huawei Technologies Co., Ltd.

Parameter	Description	Remarks
Array startup	Specifies the startup of devices in the array.	This parameter is displayed when **Shut down if feed-in current exceeds threshold** is enabled.

6.4.3 Apparent Power Control on the Inverter Output Side

On the home screen, tap **Settings** > **Power adjustment** and set inverter parameters.

Figure 6-9 Apparent power control

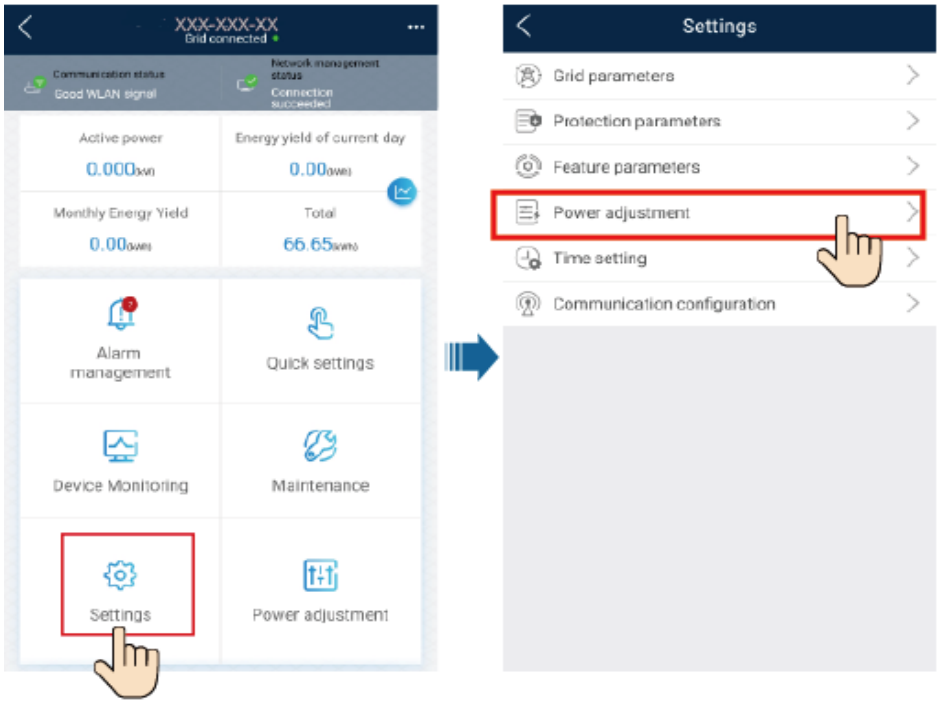

Table 6-8 Apparent power control

Parameter	Description	Value Range
Maximum apparent power (kVA)	Specifies the output upper threshold for the maximum apparent power to adapt to the capacity requirements of standard and customized solar inverters.	[Maximum active power, S_{max}]

Parameter	Description	Value Range
Highest active power (kW)	Specifies the output upper threshold for the maximum active power to adapt to different market requirements.	[0.1, P_{max}]

NOTE

The lower threshold for the maximum apparent power is the maximum active power. To lower the maximum apparent power, lower the maximum active power first.

 Copyright © Huawei Technologies Co., Ltd.

7 System Maintenance

DANGER

- Wear personal protective equipment and use dedicated insulated tools to avoid electric shocks or short circuits.

WARNING

- Before performing maintenance, power off the equipment, follow the instructions on the delayed discharge label, and wait for a period of time as specified to ensure that the equipment is not energized.

7.1 System Power-Off

Precautions

WARNING

After the system is powered off, the inverter is still energized and hot, which may cause electric shocks or burns. Therefore, wait for at least 5 minutes after system power-off and put on protective gloves before working on the inverter.

Procedure

Step 1 Send a shutdown command on the app.

Step 2 Turn off the AC switch between the inverter and the power grid.

Step 3 Set the **DC SWITCH** at the bottom of the inverter to **OFF**.

Step 4 (Optional) Install the DC switch locking screw.

 Copyright © Huawei Technologies Co., Ltd.

Figure 7-1 Installing the DC switch locking screw

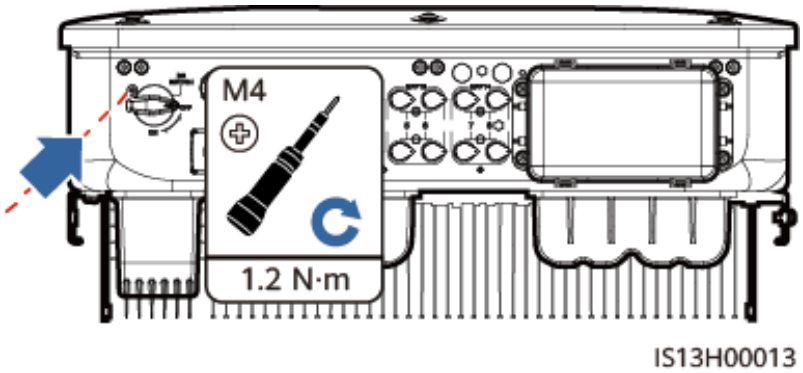

Step 5 Turn off the DC switch (if any) between the inverter and PV strings.

----End

7.2 Routine Maintenance

To ensure that the inverter can operate properly for a long term, you are advised to perform routine maintenance on it as described in this section.

CAUTION

Power off the system before cleaning the system, connecting cables, and checking grounding reliability.

Table 7-1 Maintenance checklist

Check Item	Check Method	Maintenance Interval
System cleanliness	Check whether the heat sinks are blocked or dirty.	Once every 6 to 12 months
System running status	• Check whether the inverter is damaged or deformed. • Check whether the inverter generates abnormal sound during operation. • Check whether all inverter parameters are correctly set during operation.	Once every 6 months
Electrical connections	• Check whether cables are disconnected or loose. • Check whether cables are damaged, especially whether the cable sheath that contacts a metal surface is damaged.	6 months after the first commissioning and once every 6 to 12 months after that

 Copyright © Huawei Technologies Co., Ltd.

Check Item	Check Method	Maintenance Interval
Grounding reliability	Check whether ground cables are securely connected.	6 months after the first commissioning and once every 6 to 12 months after that
Sealing	Check whether all terminals and ports are properly sealed.	Once 12 months
Vegetation around the inverter	• Perform inspection and weeding as required. • Clean the site promptly after weeding.	Based on the local wilting season

7.3 Alarm Reference

For details about alarms, see **Inverter Alarm Reference**.

DANGER

- Do not stay in front of the inverter for a long time. Do not approach the inverter unless necessary.
- If you need to operate an inverter switch, insert or remove a USB flash drive, replace a fan, or commission the inverter, you are advised to stand beside the inverter or behind it and take safety measures in strict accordance with the requirements in the user manual.

 Copyright © Huawei Technologies Co., Ltd.

WARNING

If a serious fault occurs in an internal circuit of the inverter, do not stay in front of the inverter. Perform operations according to the following instructions. Improper operations may cause a fire inside the inverter or allow a serious fault to propagate, which may endanger personal safety.

- If the inverter emits abnormal smell or smoke, catches fire, or has obvious exceptions, handle the situation according to the **Smart PV Inverter Emergency Plan**.
- If the inverter does not emit abnormal smell or smoke, catch fire, or have obvious exceptions:
  - If an alarm is generated, perform operations on the faulty inverter according to the **Inverter Alarm Reference**. If any of the alarms with IDs 2064-1, 2064-10, 2064-11, 2064-12, 2064-20, 2064-29, and 2064-30 is generated, handle it first.
  - If the inverter does not generate an alarm but the AC switch trips and the DC indicator on the inverter is off, follow these instructions:
    - Ensure that the AC switch is OFF. Do not turn it on again.
    - Ensure that there are no flammable materials under the inverter.
    - Handle the inverter at night when the DC side is completely de-energized.
  - In other cases, wait for the inverter to recover automatically. If the inverter fails to recover, contact your vendor or technical support.

 Copyright © Huawei Technologies Co., Ltd.

8 Inverter Handling

8.1 Removing the SUN2000

NOTICE

Before removing the SUN2000, disconnect both AC and DC connections.

Perform the following operations to remove the SUN2000:

1. Disconnect all cables from the SUN2000, including RS485 communications cables, DC input power cables, AC output power cables, and PGND cables.
2. Remove the SUN2000 from the mounting bracket.
3. Remove the mounting bracket.

8.2 Packing the SUN2000

- If the original packing materials are available, put the SUN2000 inside them and then seal them by using adhesive tape.
- If the original packing materials are not available, put the SUN2000 inside a suitable cardboard box and seal it properly.

8.3 Disposing of the SUN2000

If the SUN2000 service life expires, dispose of it according to the local disposal rules for electrical equipment waste.

 Copyright © Huawei Technologies Co., Ltd.

9 Technical Specifications

Efficiency

Item	SUN2000-20KTL-M3	SUN2000-20KTL-BRM3	SUN2000-29.9KTL-M3	SUN2000-30KTL-M3	SUN2000-30KTL-BRM3	SUN2000-36KTL-M3	SUN2000-40KTL-M3	SUN2000-40KTL-BRM3
Maximum efficiency	97.1%		98.65%/400 V 98.75%/480 V	98.65%/400 V 98.75%/480 V	98.65%/380 V	98.65%/400 V 98.75%/480 V	98.65%/400 V 98.75%/480 V	98.65%/380 V
European efficiency	96.7%		98.4%/400 V 98.45%/480 V	98.4%/400 V 98.45%/480 V	98.4%/380 V	98.4%/400 V 98.5%/480 V	98.4%/400 V 98.5%/480 V	98.4%/380 V

Input

Item	SUN2000-20KTL-M3	SUN2000-20KTL-BRM3	SUN2000-29.9KTL-M3	SUN2000-30KTL-M3	SUN2000-30KTL-BRM3	SUN2000-36KTL-M3	SUN2000-40KTL-M3	SUN2000-40KTL-BRM3
Recommended maximum input DC power	30,000 W		44,850 W	45,000 W		54,000 W	60,000 W	
Maximum input voltage[a]	800 V		1100 V					

 Copyright © Huawei Technologies Co., Ltd.

Item	SUN2000-20KTL-M3	SUN2000-20KTL-BRM3	SUN2000-29.9KTL-M3	SUN2000-30KTL-M3	SUN2000-30KTL-BRM3	SUN2000-36KTL-M3	SUN2000-40KTL-M3	SUN2000-40KTL-BRM3
Maximum input current per MPPT circuit	27 A							
Maximum short-circuit current per MPPT circuit	40 A							
Minimum startup voltage	200 V							
Operating voltage range[b]	200–750 V		200–1000 V					
Full-load MPPT voltage range[c]	300–550 V		500–800 V/400 V AC 625–850 V/480 V AC	500–800 V/(380 V AC, 400 V AC) 625–850 V/440 V AC 625–850 V/480 V AC	500–800 V/(380 V AC)	520–800 V/(380 V AC, 400 V AC) 625–850 V/440 V AC 625–850 V/480 V AC	540–800 V/(380 V AC, 400 V AC) 625–850 V/440 V AC 625–850 V/480 V AC	540–800 V/(380 V AC)
Rated input voltage	350 V		600 V/400 V AC 720 V/480 V AC	600 V/(380 V AC, 400 V AC) 650 V/440 V AC 720 V/480 V AC	600 V/(380 V AC)	600 V/(380 V AC, 400 V AC) 650 V/440 V AC 720 V/480 V AC	600 V/(380 V AC, 400 V AC) 650 V/440 V AC 720 V/480 V AC	600 V/(380 V AC)

 Copyright © Huawei Technologies Co., Ltd.

Item	SUN2000-20KTL-M3	SUN2000-20KTL-BRM3	SUN2000-29.9KTL-M3	SUN2000-30KTL-M3	SUN2000-30KTL-BRM3	SUN2000-36KTL-M3	SUN2000-40KTL-M3	SUN2000-40KTL-BRM3
Maximum number of inputs	8							
Number of MPPT circuits	4							
Note a: The maximum input voltage is the maximum DC input voltage that the inverter can withstand. If the input voltage exceeds this value, the inverter may be damaged. Note b: If the input voltage is beyond the operating voltage range, the inverter cannot work properly. Note c: The PV strings connecting to the same MPPT circuit shall use the same model and quantity of PV modules. It is recommended that the PV string voltage be higher than the lower threshold of the full-load MPPT voltage.								

Output

Item	SUN2000-20KTL-M3	SUN2000-20KTL-BRM3	SUN2000-29.9KTL-M3	SUN2000-30KTL-M3	SUN2000-30KTL-BRM3	SUN2000-36KTL-M3	SUN2000-40KTL-M3	SUN2000-40KTL-BRM3
Rated output power	20,000 W		29,900 W	30,000 W		36,000 W	40,000 W	
Maximum apparent power	22,000 VA		29,900 VA	33,000 VA[a]		40,000 VA	44,000 VA	
Maximum active power (cosφ = 1)	22,000 W		29,900 W	33,000 W[a]		40,000 W	44,000 W	

 Copyright © Huawei Technologies Co., Ltd.

Item	SUN2000-20KTL-M3	SUN2000-20KTL-BRM3	SUN2000-29.9KTL-M3	SUN2000-30KTL-M3	SUN2000-30KTL-BRM3	SUN2000-36KTL-M3	SUN2000-40KTL-M3	SUN2000-40KTL-BRM3
Rated output voltage[b]	127 V AC/220 V AC, 230 V AC/400 V AC, 3W+(N)[c]+PE	127 V AC/220 V AC, 3W+(N)+PE	230 V AC/400 V AC, 277 V AC/480 V AC, 3W+(N)[c]+PE	220 V AC/380 V AC, 230 V AC/400 V AC, 254 V AC/440 V AC, 277 V AC/480 V AC, 3W+(N)[c]+PE	220 V AC/380 V AC, 3W+(N)+PE	220 V AC/380 V AC, 230 V AC/400 V AC, 254 V AC/440 V AC, 277 V AC/480 V AC, 3W+(N)[c]+PE	220 V AC/380 V AC, 230 V AC/400 V AC, 254 V AC/440 V AC, 277 V AC/480 V AC, 3W+(N)[c]+PE	220 V AC/380 V AC, 3W+(N)+PE
Maximum output voltage at long-term operation	Refer to the local power grid standards.							
Rated output current	52.5 A/220 V AC 28.9 A/400 V AC	52.5 A/220 V AC	43.2 A/400 V AC 36.0 A/480 V AC	45.6 A/380 V AC 43.3 A/400 V AC 39.4 A/440 V AC 36.1 A/480 V AC	45.6 A/380 V AC	54.7 A/380 V AC 52.0 A/400 V AC 47.3 A/440 V AC 43.3 A/480 V AC	60.8 A/380 V AC 57.8 A/400 V AC 52.5 A/440 V AC 48.1 A/480 V AC	60.8 A/380 V AC

 Copyright © Huawei Technologies Co., Ltd.

Item	SUN2000-20KTL-M3	SUN2000-20KTL-BRM3	SUN2000-29.9KTL-M3	SUN2000-30KTL-M3	SUN2000-30KTL-BRM3	SUN2000-36KTL-M3	SUN2000-40KTL-M3	SUN2000-40KTL-BRM3
Maximum output current	58.0 A/220 V AC 31.9 A/400 V AC	58.0 A/220 V AC	43.2 A/400 V AC 36.0 A/480 V AC	50.4 A/380 V AC 47.9 A/400 V AC 43.5 A/440 V AC 39.9 A/480 V AC	50.4 A/380 V AC	61.1 A/380 V AC 58.0 A/400 V AC 52.8 A/440 V AC (Mexico) 48.4 A/480 V AC	67.2 A/380 V AC 63.8 A/400 V AC 58.0 A/440 V AC (Mexico) 53.2 A/480 V AC	67.2 A/380 V AC
Output voltage frequency	50 Hz/60 Hz	60 Hz	50 Hz/60 Hz	50 Hz/60 Hz	60 Hz	50 Hz/60 Hz	50 Hz/60 Hz	60 Hz
Power factor	0.8 leading to 0.8 lagging							
Output DC component (DCI)	< 0.5% of the rated output							
Maximum total harmonic distortion AC THDi	< 3% under rated conditions. Single harmonic meets the VDE 4105 requirements.							
Note a: Under the German VDE-AR-N-4105, Belgium C10/11, and Austrian TOR grid codes, the SUN2000-30KTL-M3 has a maximum apparent power of 30000 VA and a maximum active power (cosϕ=1) of 30000 W. Note b: The rated output voltage is determined by **Grid code**, which can be set on the app, SmartLogger, or management system. Note c: You can determine whether to connect the N wire based on the application scenario. In scenarios without N wires, set **Output mode** to **Three-phase three-wire**. In scenarios with N wires, set **Output Mode** to **Three-phase four-wire**.								

Protection

Item	SUN2000-20KTL-M3	SUN2000-20KTL-BRM3	SUN2000-29.9KTL-M3	SUN2000-30KTL-M3	SUN2000-30KTL-BRM3	SUN2000-36KTL-M3	SUN2000-40KTL-M3	SUN2000-40KTL-BRM3
Overvoltage category	PV II/AC III							
Input DC switch	Supported							
Anti-islanding protection	Supported							
Output overcurrent protection	Supported							
Input reverse connection protection	Supported							
PV string fault detection	Supported							
DC surge protection	Type II	Type II	Type II	Type II/ Type I[a] (optional)	Type II	Type II	Type II/ Type I[a] (optional)	Type II
AC surge protection	Type II							
Insulation resistance detection	Supported							

 Copyright © Huawei Technologies Co., Ltd.

Item	SUN2000-20KTL-M3	SUN2000-20KTL-BRM3	SUN2000-29.9KTL-M3	SUN2000-30KTL-M3	SUN2000-30KTL-BRM3	SUN2000-36KTL-M3	SUN2000-40KTL-M3	SUN2000-40KTL-BRM3
Residual current monitoring unit (RCMU)	Supported							
Note a: The DC SPD complies with IEC/EN 61643-11 and IEC/EN 61643-31.								

Display and Communication

Item	SUN2000-20KTL-M3	SUN2000-20KTL-BRM3	SUN2000-29.9KTL-M3	SUN2000-30KTL-M3	SUN2000-30KTL-BRM3	SUN2000-36KTL-M3	SUN2000-40KTL-M3	SUN2000-40KTL-BRM3
Display	LED indicators; WLAN+App							
RS485	Supported							
Built-in WLAN	Supported							
AC MBUS	Not supported. Certain spare part models support this function. For details, contact the vendor.							
DC MBUS	Supported							
AFCI	Supported							
PID recovery	Supported							

General Specifications

Item	SUN2000-20KTL-M3	SUN2000-20KTL-BRM3	SUN2000-29.9KTL-M3	SUN2000-30KTL-M3	SUN2000-30KTL-BRM3	SUN2000-36KTL-M3	SUN2000-40KTL-M3	SUN2000-40KTL-BRM3
Dimensions (W x H x D)	640 mm x 530 mm x 270 mm							
Net weight	43 kg							

 Copyright © Huawei Technologies Co., Ltd.

Item	SUN2000-20KTL-M3	SUN2000-20KTL-BRM3	SUN2000-29.9KTL-M3	SUN2000-30KTL-M3	SUN2000-30KTL-BRM3	SUN2000-36KTL-M3	SUN2000-40KTL-M3	SUN2000-40KTL-BRM3
Operating ambient temperature	–25°C to +60°C (input derated when the temperature is above +45°C)							
Relative humidity	0%–100%							
Cooling mode	Natural convection							
Maximum operating altitude	4000 m							
Storage temperature	–40°C to +70°C							
IP rating	IP66							
Topology	Transformerless							

NOTE

Equipment complying with IEC 61000-3-12

Wireless Communication Specifications

Item	Inverter Built-in WiFi	WLAN-FE Smart Dongle	4G Smart Dongle
Frequency	2400–2483.5 MHz	SDongleA-05: 2400–2483.5 MHz	SDongleB-06-EU (WiFi): 2400–2483.5 MHz SDongleB-06-EU (4G): ● Supports LTE FDD: B1/B3/B5/B8. ● Supports LTE TDD: B7/B20/B28/B38/B40/B41. ● Supports GSM/GPRS/EDGE: 900 MHz/1800 MHz. SDongleB-06-AU (WiFi): 2400–2483.5 MHz SDongleB-06-AU (4G): ● LTE-FDD: B1/B2/B3/B4/B5/B7/B8/B28 ● LTE-TDD: B40 ● WCDMA: B1/B2/B5/B8 ● GSM: 850 MHz/900 MHz/1800 MHz/1900 MHz Note: The SDongleB-06-EU applies only to Europe. The SDongleB-06-AU applies only to Australia.

 Copyright © Huawei Technologies Co., Ltd.

Item	Inverter Built-in WiFi	WLAN-FE Smart Dongle	4G Smart Dongle
Protocol standard	WLAN 802.11b/g/n	SDongleA-05: WLAN 802.11b/g/n	SDongleB-06-EU (WiFi): WLAN 802.11b/g/n SDongleB-06-EU (4G): ● Supports LTE FDD (with receive diversity): B1/B3/B5/B8. ● Supports LTE TDD (with receive diversity): B7/B20/B28/B38/B40/B41. ● Supports GSM: 900 MHz/1800 MHz. ● Supports digital audio. SDongleB-06-AU (WiFi): WLAN 802.11b/g/n SDongleB-06-AU (4G): ● Supports LTE FDD (with receive diversity): B1/B2/B3/B4/B5/B7/B8/B28/B66. ● Supports LTE-TDD (with receive diversity): B40. ● Supports WCDMA: B1/B2/B4/B5/B8. ● Supports GSM: 850/900/1800/1900 MHz. ● Supports digital audio. Note: The SDongleB-06-EU applies only to Europe. The SDongleB-06-AU applies only to Australia.

 Copyright © Huawei Technologies Co., Ltd.

Item	Inverter Built-in WiFi	WLAN-FE Smart Dongle	4G Smart Dongle
Bandwidth	20 MHz/40 MHz (optional)	20 MHz/40 MHz (optional)	LTE features: ● Supports a maximum of 3GPP R8 non-CA Cat 4 FDD and TDD. ● Supports 1.4 MHz/3 MHz/5 MHz/10 MHz/15 MHz/20 MHz RF bandwidth. ● Supports MIMO in the downlink. ● LTE FDD: maximum downlink rate of 150 Mbit/s and maximum uplink rate of 50 Mbit/s ● LTE TDD: maximum downlink rate of 130 Mbit/s and maximum uplink rate of 30 Mbit/s UMTS features: ● Supports 3GPP R7 HSDPA+, HSDPA, HSUPA, and WCDMA. ● Supports QPSK and 16QAM modulation. ● HSDPA+: maximum downlink rate of 21 Mbit/s ● HSUPA: maximum uplink rate of 5.76 Mbit/s ● WCDMA: maximum downlink rate of 384 kbit/s and maximum uplink rate of 384 kbit/s GSM features: GPRS: ● Supports GPRS multislot class 12. ● Coding schemes: CS-1, CS-2, CS-3, and CS-4 ● Maximum downlink rate: 85.6 kbit/s; maximum uplink rate: 85.6 kbit/s EDGE: ● Supports EDGE multislot class 12. ● Supports GMSK and 8-PSK modulation and coding schemes. ● Downlink coding format: MCS 1–9 ● Uplink coding format: MCS 1–9 ● Maximum downlink rate: 236.8 kbit/s; maximum uplink rate: 236.8 kbit/s

 Copyright © Huawei Technologies Co., Ltd.

Item	Inverter Built-in WiFi	WLAN-FE Smart Dongle	4G Smart Dongle
Maximum transmit power	≤ 20 dBm EIRP	≤ 20 dBm EIRP	• Class 4 (33 dBm±2 dB), EGSM900 frequency band • Class 1 (30 dBm±2 dB), DCS1800 frequency band • Class E2 (27 dBm±3 dB), EGSM900 8-PSK • Class E2 (26 dBm±3 dB), DCS1800 8-PSK • Class 3 (24 dBm+1/–3 dB), WCDMA frequency band • Class 3 (23 dBm±2 dB), LTE FDD frequency band • Class 3 (23 dBm±2 dB), LTE TDD frequency band

 Copyright © Huawei Technologies Co., Ltd.

A Grid Codes

NOTE

The grid codes are subject to change. The listed codes are for reference only.

No.	Grid Code	Description	SUN2000-20KTL-M3	SUN2000-20KTL-BRM3	SUN2000-29.9KTL-M3	SUN2000-30KTL-M3	SUN2000-30KTL-BRM3	SUN2000-36KTL-M3	SUN2000-40KTL-M3	SUN2000-40KTL-BRM3
1	VDE-AR-N-4105	Germany low-voltage power grid	-	-	-	Supported	-	Supported	Supported	-
2	NB/T 32004	China low-voltage power grid	-	-	-	Supported	-	Supported	Supported	-
3	UTE C 15-712-1(A)	France mainland power grid	-	-	-	Supported	-	Supported	Supported	-
4	UTE C 15-712-1(B)	France island power grid	-	-	-	Supported	-	Supported	Supported	-
5	UTE C 15-712-1(C)	France island power grid	-	-	Supported	Supported	-	Supported	Supported	-
6	VDE 0126-1-1-BU	Bulgaria power grid	-	-	-	Supported	-	Supported	Supported	-

 Copyright © Huawei Technologies Co., Ltd.

No.	Grid Code	Description	SUN2000-20KTL-M3	SUN2000-20KTL-BRM3	SUN2000-29.9KTL-M3	SUN2000-30KTL-M3	SUN2000-30KTL-BRM3	SUN2000-36KTL-M3	SUN2000-40KTL-M3	SUN2000-40KTL-BRM3
7	VDE 0126-1-1-GR(A)	Greece mainland power grid	-	-	-	Supported	-	Supported	Supported	-
8	VDE 0126-1-1-GR(B)	Greece island power grid	-	-	-	Supported	-	Supported	Supported	-
9	BDEW-MV	Germany medium-voltage power grid	-	-	-	Supported	-	Supported	Supported	-
10	G59-England	England 230 V power grid (I > 16 A)	-	-	-	Supported	-	Supported	Supported	-
11	G59-Scotland	Scotland 240 V power grid (I > 16 A)	-	-	-	Supported	-	Supported	Supported	-
12	G83-England	England 230 V power grid (I < 16 A)	-	-	-	Supported	-	Supported	Supported	-
13	G83-Scotland	Scotland 240 V power grid (I < 16 A)	-	-	-	Supported	-	Supported	Supported	-
14	CEI0-21	Italy power grid	-	-	-	Supported	-	Supported	Supported	-
15	RD1699/661	Spain low-voltage power grid	-	-	-	Supported	-	Supported	Supported	-

 Copyright © Huawei Technologies Co., Ltd.

No.	Grid Code	Description	SUN2000-20KTL-M3	SUN2000-20KTL-BRM3	SUN2000-29.9KTL-M3	SUN2000-30KTL-M3	SUN2000-30KTL-BRM3	SUN2000-36KTL-M3	SUN2000-40KTL-M3	SUN2000-40KTL-BRM3
16	RD1699/661-MV480	Spain medium-voltage power grid	-	-	-	Supported	-	Supported	Supported	-
17	EN50438-NL	Netherlands power grid	-	-	-	Supported	-	Supported	Supported	-
18	C10/11	Belgium power grid	-	-	-	Supported	-	Supported	Supported	-
19	AS4777	Australia power grid	-	-	Supported	Supported	-	Supported	Supported	-
20	AS4777-MV480	Australia medium-voltage power grid	-	-	Supported	Supported	-	Supported	Supported	-
21	AUSTRALIA-NER	Australia NER standard power grid	-	-	Supported	Supported	-	Supported	Supported	-
22	AUSTRALIA-NER-MV480	Australia NER standard power grid	-	-	Supported	Supported	-	Supported	Supported	-
23	AS4777-WP	Australia power grid	-	-	Supported	Supported	-	Supported	Supported	-
24	AS4777_ACT	Australia power grid	-	-	Supported	-	-	Supported	Supported	-
25	AS4777_NSW_ESS	Australia power grid	-	-	Supported	-	-	Supported	Supported	-

 Copyright © Huawei Technologies Co., Ltd.

No.	Grid Code	Description	SUN2000-20KTL-M3	SUN2000-20KTL-BRM3	SUN2000-29.9KTL-M3	SUN2000-30KTL-M3	SUN2000-30KTL-BRM3	SUN2000-36KTL-M3	SUN2000-40KTL-M3	SUN2000-40KTL-BRM3
26	AS4777_NSW_AG	Australia power grid	-	-	Supported	-	-	Supported	Supported	-
27	AS4777_QLD	Australia power grid	-	-	Supported	-	-	Supported	Supported	-
28	AS4777_SA	Australia power grid	-	-	Supported	-	-	Supported	Supported	-
29	AS4777_VIC	Australia power grid	-	-	Supported	-	-	Supported	Supported	-
30	AUSTRALIA-AS4777_A-LV230	Australia power grid	-	-	Supported	-	-	Supported	Supported	-
31	AUSTRALIA-AS4777_B-LV230	Australia power grid	-	-	Supported	-	-	Supported	Supported	-
32	AUSTRALIA-AS4777_C-LV230	Australia power grid	-	-	Supported	-	-	Supported	Supported	-
33	AUSTRALIA-AS4777_NZ-LV230	Australia power grid	-	-	Supported	-	-	Supported	Supported	-
34	IEC61727	IEC 61727 low-voltage grid-connection (50 Hz)	Supported	-	-	Supported	-	Supported	Supported	-
35	Custom (50 Hz)	Reserved	-	-	-	Supported	-	Supported	Supported	-
36	Custom (60 Hz)	Reserved	-	-	-	Supported	-	Supported	Supported	-

 Copyright © Huawei Technologies Co., Ltd.

No.	Grid Code	Description	SUN2000-20KTL-M3	SUN2000-20KTL-BRM3	SUN2000-29.9KTL-M3	SUN2000-30KTL-M3	SUN2000-30KTL-BRM3	SUN2000-36KTL-M3	SUN2000-40KTL-M3	SUN2000-40KTL-BRM3
37	CEI0-16	Italy power grid	-	-	-	Supported	-	Supported	Supported	-
38	CHINA-MV480	China medium-voltage standard power grid	-	-	-	Supported	-	Supported	Supported	-
39	CHINA-MV	China medium-voltage standard power grid	-	-	-	Supported	-	Supported	Supported	-
40	TAI-PEA	Thailand grid-connection standard	-	-	-	Supported	-	Supported	Supported	-
41	TAI-MEA	Thailand grid-connection standard	-	-	-	Supported	-	Supported	Supported	-
42	BDEW-MV480	Germany medium-voltage standard power grid	-	-	-	Supported	-	Supported	Supported	-
43	Custom MV480 (50 Hz)	Reserved	-	-	-	Supported	-	Supported	Supported	-
44	Custom MV480 (60 Hz)	Reserved	-	-	-	Supported	-	Supported	Supported	-
45	G59-England-MV480	UK 480 V medium-voltage grid connection (I > 16 A)	-	-	-	Supported	-	Supported	Supported	-

 Copyright © Huawei Technologies Co., Ltd.

No.	Grid Code	Description	SUN2000-20KTL-M3	SUN2000-20KTL-BRM3	SUN2000-29.9KTL-M3	SUN2000-30KTL-M3	SUN2000-30KTL-BRM3	SUN2000-36KTL-M3	SUN2000-40KTL-M3	SUN2000-40KTL-BRM3
46	IEC61727-MV480	IEC 61727 medium-voltage grid-connection (50 Hz)	-	-	-	Supported	-	Supported	Supported	-
47	UTE C 15-712-1-MV480	France island power grid	-	-	-	Supported	-	Supported	Supported	-
48	TAI-PEA-MV480	Thailand medium-voltage grid-connection (PEA)	-	-	-	Supported	-	Supported	Supported	-
49	TAI-MEA-MV480	Thailand medium-voltage grid-connection (MEA)	-	-	-	Supported	-	Supported	Supported	-
50	EN50438-DK-MV480	Denmark medium-voltage grid-connection	-	-	-	Supported	-	Supported	Supported	-
51	EN50438-TR-MV480	Türkiye medium-voltage power grid	-	-	-	Supported	-	Supported	Supported	-
52	EN50438-TR	Türkiye low-voltage power grid	-	-	-	Supported	-	Supported	Supported	-
53	C11/C10-MV480	Belgium medium-voltage power grid	-	-	-	Supported	-	Supported	Supported	-

 Copyright © Huawei Technologies Co., Ltd.

No.	Grid Code	Description	SUN2000-20KTL-M3	SUN2000-20KTL-BRM3	SUN2000-29.9KTL-M3	SUN2000-30KTL-M3	SUN2000-30KTL-BRM3	SUN2000-36KTL-M3	SUN2000-40KTL-M3	SUN2000-40KTL-BRM3
54	Philippines	Philippines low-voltage power grid	-	-	-	Supported	-	Supported	Supported	-
55	Philippines-MV480	Philippines medium-voltage power grid	-	-	-	Supported	-	Supported	Supported	-
56	NRS-097-2-1	South Africa standard power grid	-	-	-	Supported	-	Supported	Supported	-
57	NRS-097-2-1-MV480	South Africa medium-voltage standard power grid	-	-	-	Supported	-	Supported	Supported	-
58	KOREA	South Korea power grid	-	-	-	Supported	-	Supported	Supported	-
59	IEEE 1547-MV480	IEEE 1547-MV480	-	-	-	Supported	-	Supported	Supported	-
60	IEC61727-60Hz	IEC 61727 low-voltage grid-connection (60 Hz)	-	-	-	Supported	-	Supported	Supported	-
61	IEC61727-60Hz-MV480	IEC 61727 medium-voltage grid-connection (60 Hz)	-	-	-	Supported	-	Supported	Supported	-

Copyright © Huawei Technologies Co., Ltd.

No.	Grid Code	Description	SUN2000-20KTL-M3	SUN2000-20KTL-BRM3	SUN2000-29.9KTL-M3	SUN2000-30KTL-M3	SUN2000-30KTL-BRM3	SUN2000-36KTL-M3	SUN2000-40KTL-M3	SUN2000-40KTL-BRM3
62	CHINA_MV500	China medium-voltage standard power grid	-	-	-	Supported	-	Supported	Supported	-
63	ANRE	Romania low-voltage power grid (Type A)	-	-	-	Supported	-	Supported	Supported	-
64	PO12.3-MV480	Spain medium-voltage power grid	-	-	-	Supported	-	Supported	Supported	-
65	EN50438_IE-MV480	Ireland medium-voltage power grid	-	-	-	Supported	-	Supported	Supported	-
66	EN50438_IE	Ireland low-voltage power grid	-	-	-	Supported	-	Supported	Supported	-
67	IEC61727-50Hz-MV500	India 500 V medium-voltage power grid	-	-	-	Supported	-	Supported	Supported	-
68	CEI0-16-MV480	Italy medium-voltage power grid	-	-	-	Supported	-	Supported	Supported	-
69	PO12.3	Spain low-voltage power grid	-	-	-	Supported	-	Supported	Supported	-

Copyright © Huawei Technologies Co., Ltd.

No.	Grid Code	Description	SUN2000-20KTL-M3	SUN2000-20KTL-BRM3	SUN2000-29.9KTL-M3	SUN2000-30KTL-M3	SUN2000-30KTL-BRM3	SUN2000-36KTL-M3	SUN2000-40KTL-M3	SUN2000-40KTL-BRM3
70	CEI0-21-MV480	Italy medium-voltage power grid	-	-	-	Supported	-	Supported	Supported	-
71	KOREA-MV480	South Korea medium-voltage power grid	-	-	-	Supported	-	Supported	Supported	-
72	Egypt ETEC	Egypt low-voltage power grid	-	-	-	Supported	-	Supported	Supported	-
73	Egypt ETEC-MV480	Egypt medium-voltage power grid	-	-	-	Supported	-	Supported	Supported	-
74	EN50549-LV	Ireland power grid	-	-	-	Supported	-	Supported	Supported	-
75	EN50549-MV480	Ireland medium-voltage power grid	-	-	-	Supported	-	Supported	Supported	-
76	Jordan-Transmission	Jordan low-voltage power grid	-	-	-	Supported	-	Supported	Supported	-
77	Jordan-Transmission-MV480	Jordan medium-voltage power grid	-	-	-	Supported	-	Supported	Supported	-
78	NAMIBIA	Namibia power grid	-	-	-	Supported	-	Supported	Supported	-

Copyright © Huawei Technologies Co., Ltd.

No.	Grid Code	Description	SUN2000-20KTL-M3	SUN2000-20KTL-BRM3	SUN2000-29.9KTL-M3	SUN2000-30KTL-M3	SUN2000-30KTL-BRM3	SUN2000-36KTL-M3	SUN2000-40KTL-M3	SUN2000-40KTL-BRM3
79	ABNT NBR 16149	Brazil power grid	-	-	-	Supported	Supported	Supported	Supported	Supported
80	ABNT NBR 16149-MV480	Brazil medium-voltage power grid	-	-	-	Supported	Supported	Supported	Supported	Supported
81	SA_RPPs	South Africa low-voltage power grid	-	-	-	Supported	-	Supported	Supported	-
82	SA_RPPs-MV480	South Africa medium-voltage power grid	-	-	-	Supported	-	Supported	Supported	-
83	INDIA	India low-voltage power grid	-	-	-	Supported	-	Supported	Supported	-
84	INDIA-MV500	India medium-voltage power grid	-	-	-	Supported	-	Supported	Supported	-
85	ZAMBIA	Zambia low-voltage power grid	-	-	-	Supported	-	Supported	Supported	-
86	ZAMBIA-MV480	Zambia medium-voltage power grid	-	-	-	Supported	-	Supported	Supported	-

Copyright © Huawei Technologies Co., Ltd.

No.	Grid Code	Description	SUN2000-20KTL-M3	SUN2000-20KTL-BRM3	SUN2000-29.9KTL-M3	SUN2000-30KTL-M3	SUN2000-30KTL-BRM3	SUN2000-36KTL-M3	SUN2000-40KTL-M3	SUN2000-40KTL-BRM3
87	Chile	Chile low-voltage power grid	-	-	-	Supported	-	Supported	Supported	-
88	Chile-MV480	Chile medium-voltage power grid	-	-	-	Supported	-	Supported	Supported	-
89	Mexico-MV480	Mexico medium-voltage power grid	-	-	-	Supported	-	Supported	Supported	-
90	Malaysian	Malaysia low-voltage power grid	-	-	-	Supported	-	Supported	Supported	-
91	Malaysian-MV480	Malaysia medium-voltage power grid	-	-	-	Supported	-	Supported	Supported	-
92	KENYA_ETHIOPIA	Kenya low-voltage power grid and Ethiopia power grid	-	-	-	Supported	-	Supported	Supported	-
93	KENYA_ETHIOPIA-MV480	Kenya low-voltage power grid and Ethiopia medium-voltage power grid	-	-	-	Supported	-	Supported	Supported	-

Copyright © Huawei Technologies Co., Ltd.

No.	Grid Code	Description	SUN2000-20KTL-M3	SUN2000-20KTL-BRM3	SUN2000-29.9KTL-M3	SUN2000-30KTL-M3	SUN2000-30KTL-BRM3	SUN2000-36KTL-M3	SUN2000-40KTL-M3	SUN2000-40KTL-BRM3
94	NIGERIA	Nigeria low-voltage power grid	-	-	-	Supported	-	Supported	Supported	-
95	NIGERIA-MV480	Nigeria medium-voltage power grid	-	-	-	Supported	-	Supported	Supported	-
96	DUBAI	Dubai low-voltage power grid	-	-	-	Supported	-	Supported	Supported	-
97	DUBAI-MV480	Dubai medium-voltage power grid	-	-	-	Supported	-	Supported	Supported	-
98	Northern Ireland	Northern Ireland low-voltage power grid	-	-	-	Supported	-	Supported	Supported	-
99	Northern Ireland-MV480	Northern Ireland medium-voltage power grid	-	-	-	Supported	-	Supported	Supported	-
100	Cameroon	Cameroon low-voltage power grid	-	-	-	Supported	-	Supported	Supported	-
101	Cameroon-MV480	Cameroon medium-voltage power grid	-	-	-	Supported	-	Supported	Supported	-

Copyright © Huawei Technologies Co., Ltd.

No.	Grid Code	Description	SUN2000-20KTL-M3	SUN2000-20KTL-BRM3	SUN2000-29.9KTL-M3	SUN2000-30KTL-M3	SUN2000-30KTL-BRM3	SUN2000-36KTL-M3	SUN2000-40KTL-M3	SUN2000-40KTL-BRM3
102	Jordan-Distribution	Jordan power distribution network low-voltage power grid	-	-	-	Supported	-	Supported	Supported	-
103	Jordan-Distribution-MV480	Jordan power distribution network medium-voltage power grid	-	-	-	Supported	-	Supported	Supported	-
104	NAMIBIA_MV480	Namibia power grid	-	-	-	Supported	-	Supported	Supported	-
105	LEBANON	Lebanon low-voltage power grid	-	-	-	Supported	-	Supported	Supported	-
106	LEBANON-MV480	Lebanon medium-voltage power grid	-	-	-	Supported	-	Supported	Supported	-
107	ARGENTINA-MV500	Argentina medium-voltage power grid	-	-	-	Supported	-	Supported	Supported	-
108	Jordan-Transmission-HV	Jordan high-voltage power grid	-	-	-	Supported	-	Supported	Supported	-

Copyright © Huawei Technologies Co., Ltd.

No.	Grid Code	Description	SUN2000-20KTL-M3	SUN2000-20KTL-BRM3	SUN2000-29.9KTL-M3	SUN2000-30KTL-M3	SUN2000-30KTL-BRM3	SUN2000-36KTL-M3	SUN2000-40KTL-M3	SUN2000-40KTL-BRM3
109	Jordan-Transmission-HV480	Jordan high-voltage power grid	-	-	-	Supported	-	Supported	Supported	-
110	TUNISIA	Tunisia power grid	-	-	-	Supported	-	Supported	Supported	-
111	TUNISIA-MV480	Tunisia medium-voltage power grid	-	-	-	Supported	-	Supported	Supported	-
112	SAUDI	Saudi Arabia power grid	-	-	-	Supported	-	Supported	Supported	-
113	SAUDI-MV480	Saudi Arabia power grid	-	-	-	Supported	-	Supported	Supported	-
114	Ghana-MV480	Ghana medium-voltage power grid	-	-	-	Supported	-	Supported	Supported	-
115	Israel	Israel power grid	-	-	-	Supported	-	Supported	Supported	-
116	Israel-MV400	Israel power grid	-	-	-	Supported	-	Supported	Supported	-
117	Israel-MV480	Israel power grid	-	-	-	Supported	-	Supported	Supported	-
118	Chile-PMGD	Chile PMGD power grid	-	-	-	Supported	-	Supported	Supported	-

Copyright © Huawei Technologies Co., Ltd.

No.	Grid Code	Description	SUN2000-20KTL-M3	SUN2000-20KTL-BRM3	SUN2000-29.9KTL-M3	SUN2000-30KTL-M3	SUN2000-30KTL-BRM3	SUN2000-36KTL-M3	SUN2000-40KTL-M3	SUN2000-40KTL-BRM3
119	Chile-PMGD-MV480	Chile PMGD power grid	-	-	-	Supported	-	Supported	Supported	-
120	VDE-AR-N4120-HV	VDE 4120 standard power grid	-	-	-	Supported	-	Supported	Supported	-
121	VDE-AR-N4120-HV480	VDE 4120 standard power grid	-	-	-	Supported	-	Supported	Supported	-
122	CHINA-LV220/380	China low-voltage power grid	-	-	-	Supported	-	Supported	Supported	-
123	Vietnam	Vietnam power grid	-	-	-	Supported	-	Supported	Supported	-
124	Vietnam-MV480	Vietnam power grid	-	-	-	Supported	-	Supported	Supported	-
125	TAIPOWER	Taiwan Power low-voltage power grid	-	-	-	Supported	-	Supported	Supported	-
126	TAIPOWER-MV480	Taiwan Power medium-voltage power grid (480 V)	-	-	-	Supported	-	Supported	Supported	-
127	ARGENTINA-MV480	Argentina medium-voltage power grid	-	-	-	Supported	-	Supported	Supported	-

Copyright © Huawei Technologies Co., Ltd.

No.	Grid Code	Description	SUN2000-20KTL-M3	SUN2000-20KTL-BRM3	SUN2000-29.9KTL-M3	SUN2000-30KTL-M3	SUN2000-30KTL-BRM3	SUN2000-36KTL-M3	SUN2000-40KTL-M3	SUN2000-40KTL-BRM3
128	OMAN	Oman low-voltage power grid	-	-	-	Supported	-	Supported	Supported	-
129	OMAN-MV480	Oman medium-voltage power grid	-	-	-	Supported	-	Supported	Supported	-
130	KUWAIT	Kuwait low-voltage power grid	-	-	-	Supported	-	Supported	Supported	-
131	KUWAIT-MV480	Kuwait medium-voltage power grid	-	-	-	Supported	-	Supported	Supported	-
132	BANGLADESH	Bangladesh low-voltage power grid	-	-	-	Supported	-	Supported	Supported	-
133	BANGLADESH-MV480	Bangladesh medium-voltage power grid	-	-	-	Supported	-	Supported	Supported	-
134	Chile-Net_Billing	Chile Net Billing power grid	-	-	-	Supported	-	Supported	Supported	-
135	EN50438-NL-MV480	Netherlands medium-voltage power grid	-	-	-	Supported	-	Supported	Supported	-

Copyright © Huawei Technologies Co., Ltd.

No.	Grid Code	Description	SUN2000-20KTL-M3	SUN2000-20KTL-BRM3	SUN2000-29.9KTL-M3	SUN2000-30KTL-M3	SUN2000-30KTL-BRM3	SUN2000-36KTL-M3	SUN2000-40KTL-M3	SUN2000-40KTL-BRM3
136	BAHRAIN	Bahrain low-voltage power grid	-	-	-	Supported	-	Supported	Supported	-
137	BAHRAIN-MV480	Bahrain medium-voltage power grid	-	-	-	Supported	-	Supported	Supported	-
138	Fuel_Engine_Grid	Genset hybrid power grid	-	-	-	Supported	-	Supported	Supported	-
139	Fuel-Engine-Grid-60Hz	Genset hybrid power grid	-	-	-	Supported	-	Supported	Supported	-
140	ARGENTINA	Argentina power grid	-	-	-	Supported	-	Supported	Supported	-
141	Mauritius	Mauritius power grid	-	-	-	Supported	-	Supported	Supported	-
142	Mauritius-MV480	Mauritius medium-voltage power grid	-	-	-	Supported	-	Supported	Supported	-
143	EN50438-SE	Sweden low-voltage power grid	-	-	-	Supported	-	Supported	Supported	-
144	Pakistan	Pakistan power grid	-	-	-	Supported	-	Supported	Supported	-
145	Austria	Austria power grid	-	-	-	Supported	-	Supported	Supported	-

Copyright © Huawei Technologies Co., Ltd.

No.	Grid Code	Description	SUN2000-20KTL-M3	SUN2000-20KTL-BRM3	SUN2000-29.9KTL-M3	SUN2000-30KTL-M3	SUN2000-30KTL-BRM3	SUN2000-36KTL-M3	SUN2000-40KTL-M3	SUN2000-40KTL-BRM3
146	Austria-MV480	Austria medium-voltage power grid	-	-	-	Supported	-	Supported	Supported	-
147	G99-TYPEA-LV	UK G99-TYPEA-LV	-	-	-	Supported	-	Supported	Supported	-
148	G99-TYPEB-LV	UK G99-TYPEB-LV	-	-	-	Supported	-	Supported	Supported	-
149	G99-TYPEB-HV	UK G99-TYPEB-HV	-	-	-	Supported	-	Supported	Supported	-
150	G99-TYPEB-HV-MV480	UK G99-TYPEB-HV medium-voltage	-	-	-	Supported	-	Supported	Supported	-
151	G99-TYPEA-HV	UK G99-TYPEA-HV	-	-	-	Supported	-	Supported	Supported	-
152	EN50549-MV400	Ireland new standard power grid	-	-	-	Supported	-	Supported	Supported	-
153	VDE-AR-N4110	Germany medium-voltage power grid (230 V)	-	-	-	Supported	-	Supported	Supported	-
154	VDE-AR-N4110-MV480	Germany medium-voltage standard power grid	-	-	-	Supported	-	Supported	Supported	-
155	NTS	Spain power grid	-	-	-	Supported	-	Supported	Supported	-

 Copyright © Huawei Technologies Co., Ltd.

No.	Grid Code	Description	SUN2000-20KTL-M3	SUN2000-20KTL-BRM3	SUN2000-29.9KTL-M3	SUN2000-30KTL-M3	SUN2000-30KTL-BRM3	SUN2000-36KTL-M3	SUN2000-40KTL-M3	SUN2000-40KTL-BRM3
156	NTS-MV480	Spain medium-voltage power grid	-	-	-	Supported	-	Supported	Supported	-
157	CEA	India CEA low-voltage power grid	-	-	-	Supported	-	Supported	Supported	-
158	CEA-MV480	India CEA medium-voltage power grid	-	-	-	Supported	-	Supported	Supported	-
159	SINGAPORE	Singapore low-voltage power grid	-	-	-	Supported	-	Supported	Supported	-
160	SINGAPORE-MV480	Singapore medium-voltage power grid	-	-	-	Supported	-	Supported	Supported	-
161	HONGKONG	Hong Kong low-voltage power grid	-	-	-	Supported	-	Supported	Supported	-
162	HONGKONG-MV480	Hong Kong medium-voltage power grid	-	-	-	Supported	-	Supported	Supported	-
163	C10/11-MV400	Belgium medium-voltage power grid	-	-	-	Supported	-	Supported	Supported	-

Copyright © Huawei Technologies Co., Ltd.

No.	Grid Code	Description	SUN2000-20KTL-M3	SUN2000-20KTL-BRM3	SUN2000-29.9KTL-M3	SUN2000-30KTL-M3	SUN2000-30KTL-BRM3	SUN2000-36KTL-M3	SUN2000-40KTL-M3	SUN2000-40KTL-BRM3
164	EN50549-SE	Sweden low-voltage power grid	-	-	-	Supported	-	Supported	Supported	-
165	EN50549-PL	Poland power grid	-	-	-	Supported	-	Supported	Supported	-
166	DANMARK-EN50549-DK1-LV230	Denmark power grid	-	-	-	Supported	-	Supported	Supported	-
167	DANMARK-EN50549-DK2-LV230	Denmark power grid	-	-	-	Supported	-	Supported	Supported	-
168	SWITZERLAND-LV230	Switzerland power grid	-	-	-	Supported	-	Supported	Supported	-
169	ABNT NBR 16149-LV127	Brazil low-voltage power grid	Supported	Supported	-	-	-	-	-	-
170	Mexico-LV220	Mexico low-voltage power grid	Supported	-	-	-	-	-	-	-
171	Philippines-LV220-50Hz	Philippines low-voltage power grid (50 Hz)	Supported	-	-	-	-	-	-	-
172	Philippines-LV220-60Hz	Philippines low-voltage power grid (60 Hz)	Supported	-	-	-	-	-	-	-

Copyright © Huawei Technologies Co., Ltd.

No.	Grid Code	Description	SUN2000-20KTL-M3	SUN2000-20KTL-BRM3	SUN2000-29.9KTL-M3	SUN2000-30KTL-M3	SUN2000-30KTL-BRM3	SUN2000-36KTL-M3	SUN2000-40KTL-M3	SUN2000-40KTL-BRM3
173	TAIPOWER-LV220	Taiwan Power low-voltage power grid	Supported	-	-	-	-	-	-	-
174	NC2022	New Caledonia power grid	-	-	-	Supported	-	Supported	Supported	-
175	AUSTRIA-TYPEB-LV400	Austria power grid	-	-	-	Supported	-	Supported	Supported	-
176	AUSTRIA-TYPEB-LV480	Austria power grid	-	-	-	Supported	-	Supported	Supported	-
177	AUSTRIA-TYPEB-MV400	Austria power grid	-	-	-	Supported	-	Supported	Supported	-
178	AUSTRIA-TYPEB-MV480	Austria power grid	-	-	-	Supported	-	Supported	Supported	-
179	EN50438-CZ	Czech Republic power grid[a]	-	-	-	Supported	-	Supported	Supported	-
180	CZECH-EN50549-LV230	Czech Republic power grid[a]	-	-	-	Supported	-	Supported	Supported	-
181	BRAZIL-P140-LV220	Brazil P140 power grid	-	-	-	Supported	Supported	-	Supported	Supported
182	BRAZIL-P140-127/220	Brazil P140 power grid	Supported	Supported	-	-	-	-	-	-

Copyright © Huawei Technologies Co., Ltd.

No.	Grid Code	Description	SUN2000-20KTL-M3	SUN2000-20KTL-BRM3	SUN2000-29.9KTL-M3	SUN2000-30KTL-M3	SUN2000-30KTL-BRM3	SUN2000-36KTL-M3	SUN2000-40KTL-M3	SUN2000-40KTL-BRM3
183	BRAZIL-P140-480	Brazil P140 power grid	-	-	-	Supported	Supported	-	Supported	Supported
184	ANRE-MV480	Romania medium-voltage power grid	-	-	-	Supported	-	Supported	Supported	-
185	FINLAND-EN50549-LV230	Finland power grid	-	-	-	Supported	-	-	Supported	-
186	ANRE-TYPEB	Romania power grid (type B)	-	-	-	Supported	-	Supported	Supported	-
187	ANRE-TYPEB-MV480	Romania power grid (type B)	-	-	-	Supported	-	Supported	Supported	-
188	CHINA-GBT19964-500	China Region power grid[b]	-	-	-	Supported	-	Supported	-	-
189	CHINA-GBT19964-480	China Region power grid[b]	-	-	-	Supported	-	Supported	Supported	-
190	FRANCE-EN50549-230	France FDC11-519-11	-	-	-	Supported	-	Supported	Supported	-
191	CZECH-EN50549-B1/B2-230	Czech Republic power grid (B1/B2)	-	-	-	Supported	-	Supported	Supported	-
192	SRI LANKA-230	Sri Lanka power grid	-	-	-	Supported	-	Supported	Supported	-

Copyright © Huawei Technologies Co., Ltd.

No.	Grid Code	Description	SUN2000-20KTL-M3	SUN2000-20KTL-BRM3	SUN2000-29.9KTL-M3	SUN2000-30KTL-M3	SUN2000-30KTL-BRM3	SUN2000-36KTL-M3	SUN2000-40KTL-M3	SUN2000-40KTL-BRM3
193	FRANCE-EN50549-519/12-230	France FDC11-519-12	-	-	-	Supported	-	Supported	Supported	-
194	CHILE-Net_Billing-MV-220	Chile medium-voltage power grid	-	-	-	Supported	-	Supported	Supported	-
195	CHINA-GBT29319-LV220	China power grid	-	-	-	Supported	-	Supported	Supported	-
Note a: The Czech Republic grid code requires that the inverter be subject to dispatching by the electric power company through DI. For details, see **F Setting Dry Contact Scheduling**. Note b: Only certain models support this grid code. For details, contact your vendor.										

Copyright © Huawei Technologies Co., Ltd.

B Device Commissioning

Step 1 Access the **Commission Device** screen.

Figure B-1 Method 1: before login (not connected to the Internet)

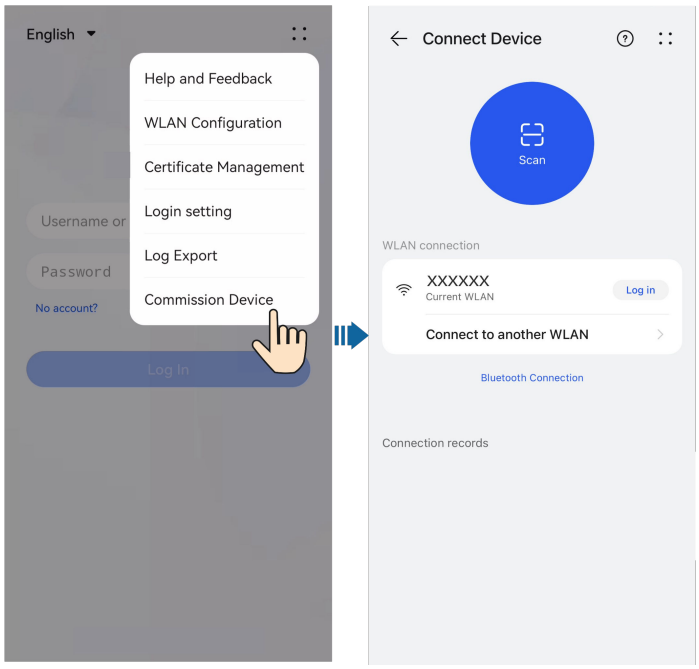

 Copyright © Huawei Technologies Co., Ltd.

Figure B-2 Method 2: after login (connected to the Internet)

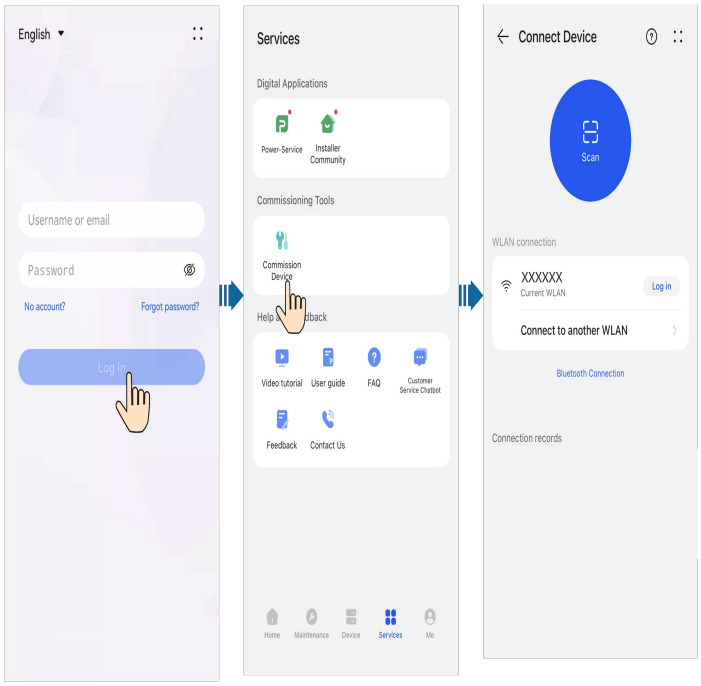

Step 2 Connect to the inverter WLAN, log in as **Installer**, and access the device commissioning screen.

NOTICE

- When connecting to the inverter directly from the mobile phone, keep the mobile phone visible within 3 meters of the inverter to ensure the communication quality between the app and inverter. The distance is for reference only and may vary with mobile phones and shielding conditions.
- When connecting to the inverter WLAN over a router, ensure that the mobile phone and inverter are in the WLAN coverage of the router and the inverter is connected to the router.
- Ensure that the router supports WLAN (IEEE 802.11 b/g/n, 2.4 GHz) and the WLAN signal covers the inverter.
- The WPA, WPA2, or WPA/WPA2 encryption mode is recommended for routers. The Enterprise mode is not supported (such as airport WLAN and other public hotspots that require authentication). WEP and WPA TKIP are not recommended because they have serious security vulnerabilities. If the access fails in WEP mode, log in to the router and change the encryption mode of the router to WPA2 or WPA/WPA2.

 Copyright © Huawei Technologies Co., Ltd.

NOTE

- The initial password for connecting to the inverter WLAN can be obtained from the label on the side of the inverter.
- Set the password upon the first login. You are advised to change the password periodically. After changing the password, remember the new password to ensure account security. Your password might be stolen or cracked if it is left unchanged for extended periods. If a password is lost, devices cannot be accessed. In these cases, the Company shall not be liable for any loss caused to the plant.
- When you access the **Commission Device** screen of the inverter for the first time, you need to manually set the login password because the inverter does not have an initial login password.

----End

 Copyright © Huawei Technologies Co., Ltd.

C Built-in PID Recovery

NOTICE

Ensure that the inverter PE cable is securely connected. Otherwise, the built-in PID recovery function may be unavailable and electric shocks may occur.

Procedure

Step 1 On the home screen, choose **Settings** > **Feature parameters** and set related parameters.

Figure C-1 Setting PID suppression parameters

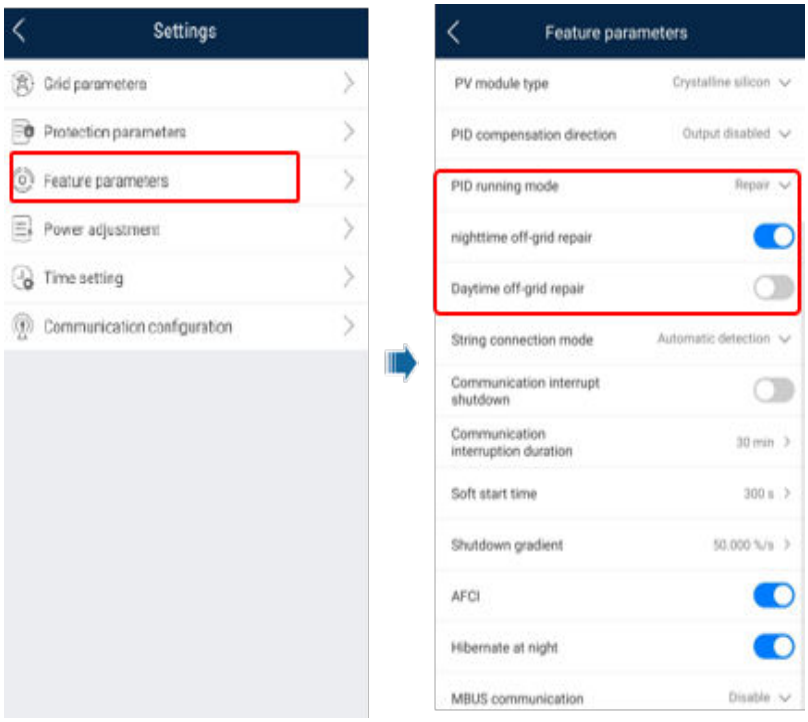

 Copyright © Huawei Technologies Co., Ltd.

NOTE

- Set **Built-in PID running mode** to **Repair** (**Disable** by default).
- Set **Nighttime off-grid repair** to . (This parameter is displayed when **Built-in PID running mode** is set to **Repair**.)

----End

D NS Protection

Connecting NS Protection Signal Cables to Inverters

NOTE

- The NS protection function applies to areas that comply with the VDE 4105 standard.
- To use the NS protection function, connect the switch to DIN5 (pin 15) and GND (pin 13) at the communications terminal of the inverter. The switch shall be closed by default. When the switch is opened, NS protection is triggered.
- The cable connection method for a single inverter is the same as that for cascaded inverters. For a single inverter, connect GND and DIN5 to the same cable.
- Log in to the local commissioning screen as **Installer**, choose **Set** > **Feature parameters** > **Dry contact function**, and set the dry contact function to **NS protection**. To enable NS protection for multiple inverters, set **Dry contact function** to **NS protection** for each inverter.
- DI rapid shutdown and NS protection use the same DIN5 (pin 15) and GND (pin 13). Therefore, you can use only either of the functions.

Figure D-1 Connecting cascaded inverters to the NS protection switch

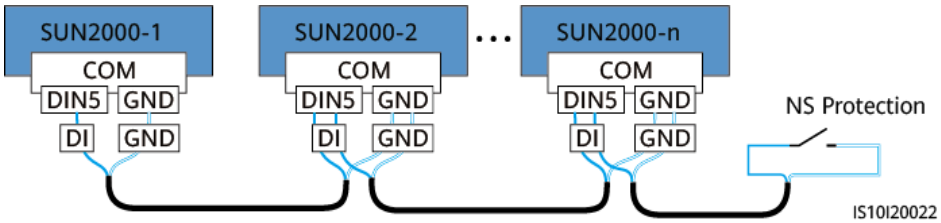

 Copyright © Huawei Technologies Co., Ltd.

E Resetting a Password

E.1 Power-On and Power-Off

Step 1 Check that the AC and DC sides of the inverter are both powered on, and indicators and are steady green or blinking slowly for more than 3 minutes.

Step 2 Turn off the AC switch, set the **DC SWITCH** on the inverter to **OFF**, and wait until all LED indicators on the inverter panel are off.

Step 3 Complete the following operations within 4 minutes:

1. Turn on the AC switch and wait about 90s or until the inverter indicator blinks.
2. Turn off the AC switch and wait about 30s or until all LED indicators on the inverter panel are off.
3. Turn on the AC switch and wait about 30s or until all LED indicators on the inverter panel blink and then are off after about 30s.
4. Turn off the AC switch and wait about 30s or until all LED indicators on the inverter panel are off.
5. Turn on the AC switch and wait about 30s or until all LED indicators on the inverter panel blink and then are off after about 30s.

Step 4 Wait until the three LED indicators on the inverter panel blink green fast and then blink red fast, which indicates that the password is restored.

Step 5 Reset the password within 10 minutes. (If no operation is performed within 10 minutes, the login password of the inverter remains unchanged.)

1. Wait until the indicator blinks.
2. Connect to the app using the initial WLAN hotspot name (SSID) and initial password (PSW), which can be obtained from the label on the side of the inverter.
3. On the login screen, set a new password and log in to the app.

----End

 Copyright © Huawei Technologies Co., Ltd.

NOTICE

You are advised to reset the password in the morning or at night when the solar irradiance is low.

E.2 Resetting the Password After Connecting to the Device and Obtaining the Verification Code

NOTICE

This method applies only to the SUN2000-20KTL-M3, SUN2000-30KTL-M3, and SUN2000-40KTL-M3.

Prerequisites

1. The inverter is networked with the SmartLogger5000B, SmartMGC5000B, or Smart Dongle.
2. The inverter has been connected to the management system.
3. The inverter, SmartLogger5000B, SmartMGC5000B, or Smart Dongle, and app are of the latest versions.

Procedure

1. Log in to the app and choose **Services** > **Device Commissioning**.
2. Connect to the WLAN of the inverter and access the **Log in** screen.

   NOTE

   Connect to the WLAN of the inverter as follows:

   - Tap **Scan**. On the scanning screen, align the QR code of the device WLAN with the scanning box to automatically scan and connect to the device.
   - If the login screen is not displayed after you scan the QR code, check whether your phone is correctly connected to the device WLAN. If not, manually select and connect to the WLAN.
3. On the **Log in** screen, select the user role whose password needs to be reset and tap **Forgot password?**.
4. On the **Reset Password** screen, choose **Get Code**.

   NOTE

   If you fail to obtain a verification code, reset the password by operating the AC switch and "DC SWITCH" of the inverter. For details, see section "Resetting a Password" in the inverter user manual.
5. Enter the login password of the app to obtain a verification code as prompted.

   NOTE

   The verification code is valid for 30 minutes. Enter it in the text box within the validity period.

Copyright © Huawei Technologies Co., Ltd.

6. On the **Reset Password** screen, enter the verification code and tap **OK**.

   NOTE

   The verification code will expire after 10 failed attempts. In that case, you need to obtain a new verification code.

7. On the **Log In** screen, set a new password.

   NOTE

   Set a new password to log in to the device again within 10 minutes.

Figure E-1 Login screen

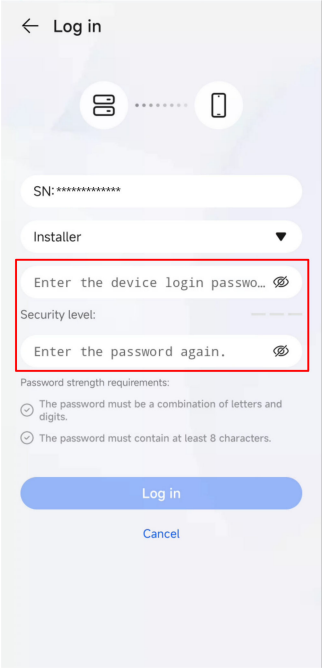

More Instructions

If the message in the following figure is displayed, tap **OK** to return to the device connection screen, reconnect to the device WLAN, access the **Reset Password** screen again, and enter the verification code.

 Copyright © Huawei Technologies Co., Ltd.

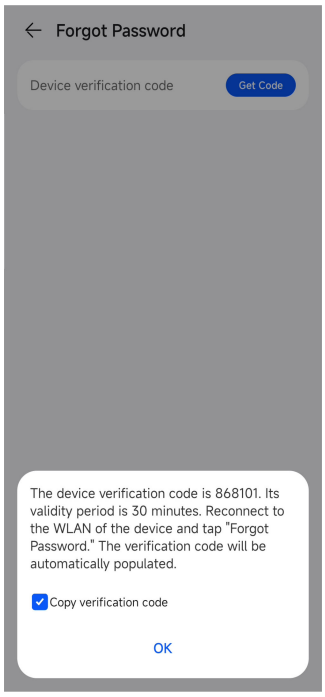

E.3 Resetting the Password After Obtaining the Verification Code and Connecting to the Device

NOTICE

This method applies only to the SUN2000-20KTL-M3, SUN2000-30KTL-M3, and SUN2000-40KTL-M3.

Prerequisites

1. The inverter is networked with the SmartLogger5000B, SmartMGC5000B, or Smart Dongle.
2. The inverter has been connected to the management system.
3. The inverter, SmartLogger5000B, SmartMGC5000B, or Smart Dongle, and app are of the latest versions.

Procedure

1. Log in to the app and select the target plant on the home screen.
2. On the **Device** screen, choose **Inverter** > **: :** > **O&M Authorization** > **Device verification code**.
3. On the **Device verification code** screen, choose **Get Code**.

   NOTE

   If you fail to obtain a verification code, reset the password by operating the AC switch and "DC SWITCH" of the inverter. For details, see section "Resetting a Password" in the inverter user manual.

 Copyright © Huawei Technologies Co., Ltd.

4. Enter the login password of the app to obtain a verification code as prompted.

   NOTE

   The verification code is valid for 30 minutes. Enter it in the text box within the validity period.

5. Select options as prompted and connect to the WLAN of the inverter.

   NOTE

   Connect to the WLAN of the inverter as follows:

   - Tap **Scan**. On the scanning screen, align the QR code of the device WLAN with the scanning box to automatically scan and connect to the device.
   - If the login screen is not displayed after you scan the QR code, check whether your phone is correctly connected to the device WLAN. If not, manually select and connect to the WLAN.

6. On the **Log in** screen, select the user role whose password needs to be reset and tap **Forgot password?**.
7. On the **Reset Password** screen, enter the verification code and tap **OK**.

   NOTE

   The verification code will expire after 10 failed attempts. In that case, you need to obtain a new verification code.

8. On the **Log In** screen, set a new password.

   NOTE

   Set a new password to log in to the device again within 10 minutes.

Figure E-2 Login screen

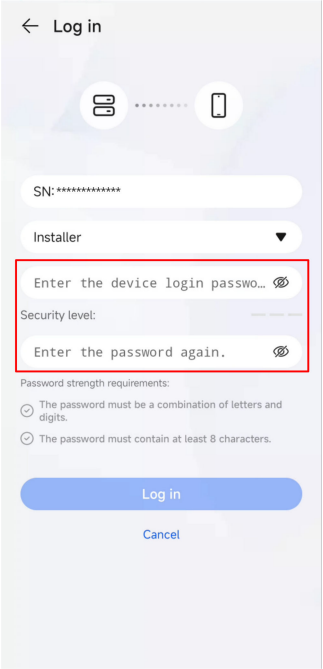

 Copyright © Huawei Technologies Co., Ltd.

E.4 Resetting the Password on the SmartLogger WebUI

NOTICE

This method applies only to the SUN2000-20KTL-M3, SUN2000-30KTL-M3, and SUN2000-40KTL-M3.

Prerequisites

1. The inverter has not been connected to the management system.
2. The inverter is networked with the SmartLogger5000B or SmartMGC5000B.
3. The inverter, SmartLogger5000B or SmartMGC5000B, and app are of the latest versions.

Procedure

1. Log in to the SmartLogger WebUI and choose **Maintenance** > **Security Management** > **Password Reset**.
2. Select the inverter for which the password needs to be reset.
3. Click **Reset** to obtain a verification code.

   NOTE

   The verification code is valid for 4 hours. Enter it in the text box within the validity period.
4. Log in to the app and choose **Services** > **Device Commissioning**.
5. Connect to the WLAN of the inverter and access the **Log in** screen.

   NOTE

   Connect to the WLAN of the inverter as follows:
   - Tap **Scan**. On the scanning screen, align the QR code of the device WLAN with the scanning box to automatically scan and connect to the device.
   - If the login screen is not displayed after you scan the QR code, check whether your phone is correctly connected to the device WLAN. If not, manually select and connect to the WLAN.
6. On the **Log in** screen, select the user role whose password needs to be reset and tap **Forgot password?**.
7. On the **Reset Password** screen, enter the verification code and tap **OK**.

   NOTE

   The verification code will expire after 10 failed attempts. In that case, you need to obtain a new verification code.
8. Connect to the WLAN of the inverter and access the **Log in** screen.

Copyright © Huawei Technologies Co., Ltd.

NOTE

Connect to the WLAN of the inverter as follows:

- Tap **Scan**. On the scanning screen, align the QR code of the device WLAN with the scanning box to automatically scan and connect to the device.
- If the login screen is not displayed after you scan the QR code, check whether your phone is correctly connected to the device WLAN. If not, manually select and connect to the WLAN.

9. On the **Log In** screen, set a new password.

NOTE

Set a new password to log in to the device again within 10 minutes.

Figure E-3 Login screen

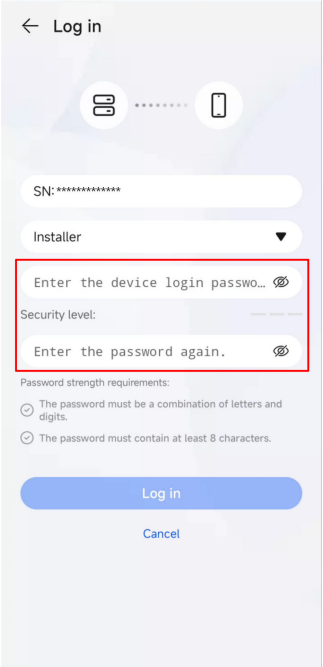

 Copyright © Huawei Technologies Co., Ltd.

F Setting Dry Contact Scheduling

NOTICE

- In the inverter parallel connection scenario with Smart Dongle networking, log in to the SmartLogger to set parameters.
- In the inverter parallel connection scenario with Smart Dongle networking, log in to the inverter connected to the Smart Dongle to set parameters.

Function

This function applies to scenarios where the grid company performs remote scheduling through dedicated ripple control receivers. The grid company remotely sends a scheduling command (%) to the plant with a wireless transmitting apparatus. Then, the wireless receiving apparatus receives the scheduling command and converts it into a DI signal. The plant monitoring device controls the inverter to output the corresponding power.

Ensure that the inverter is correctly connected to the ripple control receiver when setting this function. (In Germany and some other European areas, the grid company uses the ripple control receiver to convert a power grid scheduling signal to a dry contact signal, and the power plant uses a dry contact to receive the signal.)

NOTE

When the functions of limited feed-in or zero feed-in and scheduling via the DI port are enabled at the same time, the system calculates the output power thresholds for both functions respectively, and then sends the smaller value to the inverter.

Procedure

1. **Connect to the inverter on the app** and log in to the local commissioning screen of the device.
2. Choose **Set** > **Power adjustment** > **Dry contact scheduling settings**.
3. Enable **Dry contact scheduling** and set related parameters as prompted.

 Copyright © Huawei Technologies Co., Ltd.

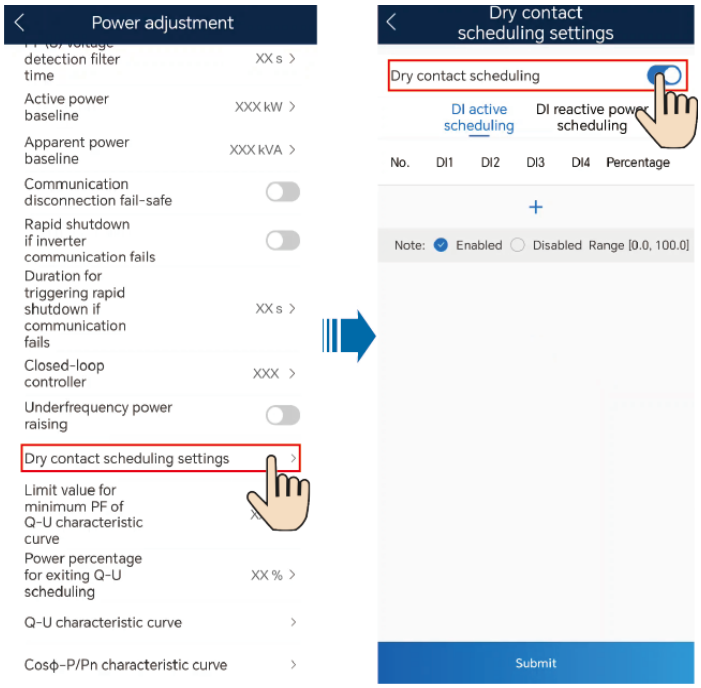

Parameter	Description
DI active scheduling	Sets the DI scheduling signals and the corresponding active output power percentage levels.
DI reactive power scheduling	Sets the DI scheduling signals and the corresponding reactive output power percentage levels.

NOTE

- The two scheduling modes support 16 levels of percentages. The percentage levels of DI1–DI4 must differ from each other. Otherwise, an exception will occur during command parsing.
- If the actual input DI signal is inconsistent with the setting, an **Abnormal DI Instruction** alarm will be generated.

 Copyright © Huawei Technologies Co., Ltd.

G Setting RCD Parameters

Function

A residual current device (RCD) detects residual current (that is, leakage current of an electrical system to ground, including the residual current of an inverter to the ground and the residual current of a PV module to the ground), and automatically disconnects the inverter from the power grid when residual current exceeds the preset threshold.

Procedure

1. **Connect to the inverter on the app** and log in to the local commissioning screen of the device.
2. Choose **Set** > **Feature parameters**. Set the parameters **RCD enhancing** and **Current Threshold for Triggering RCD Protection** as required.

Parameter	Description
Current Threshold for Triggering RCD Protection	Sets the residual current threshold for triggering RCD protection. If the residual current of the electrical system to ground is greater than the current threshold for triggering RCD protection, the inverter shuts down due to RCD protection. **NOTICE** • If the current threshold for triggering RCD protection is set to a smaller value, the inverter is more likely to be shut down due to RCD protection. Exercise caution when setting this parameter. • Adjusting the current threshold for triggering RCD protection may cause the inverter to frequently trigger the protection mechanism. In this case, you can increase the threshold to disable the protection mechanism. Exercise caution when setting this parameter. If you have any questions, contact the vendor or manufacturer.

 Copyright © Huawei Technologies Co., Ltd.

Parameter	Description
RCD enhancing	Enables or disables the RCD enhancement function. ● **Enable**: enables the RCD enhancement function. If the RCD enhancement function is enabled, the residual current of the inverter will decrease. You are advised to enable this function if an AC switch with a residual current detection function is installed outside the inverter or the inverter operates in a humid environment (for example, on rainy days) and the inverter frequently triggers RCD protection. ● **Disabled**: disables the RCD enhancement function. **NOTICE** Enabling the RCD enhancement function may cause power derating of the inverter.

 Copyright © Huawei Technologies Co., Ltd.

H AFCI

Function

If PV modules or cables are incorrectly connected or damaged, electric arcs may be generated, which may cause fire. Huawei solar inverters provide arc detection meets the requirement of UL 1699B-2018, ensuring the user safety and property.

This function is enabled by default. The solar inverter automatically detects arc faults. To disable this function, log in to the app, enter the **Device Commissioning** screen, choose **Settings** > **Feature parameters**, and disable **AFCI**.

NOTE

The AFCI function works only with Huawei optimizers or ordinary PV modules when the inverter is connected to the grid, but does not support third-party optimizers or intelligent PV modules.

Clearing Alarms

The AFCI function involves the **DC arc fault** alarm.

The SUN2000 has the AFCI alarm automatic clearance mechanism. If an alarm is triggered for less than five times within 24 hours, the SUN2000 automatically clears the alarm. If the alarm is triggered for more than five times within 24 hours, the SUN2000 locks for protection. You need to manually clear the alarm on the SUN2000 so that it can work properly.

You can manually clear the alarm as follows:

- **Method 1**: App

  Log in to the app and choose **Device Commissioning**. On the **Device Commissioning** screen, connect and log in to the inverter that has generated the AFCI alarm, tap **Alarm management**, and tap **Delete** on the right of the **DC arc fault** alarm to clear the alarm.

  Figure H-1 Alarm management

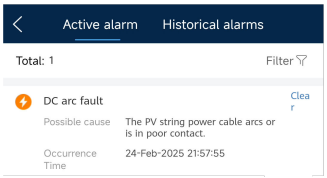

- **Method 2**: Management system

  Log in to the management system using a non-owner account, choose **Maintenance** > **Alarm Management**, select **DC arc fault**, and click **Clear**.

  Figure H-2 Clearing alarms

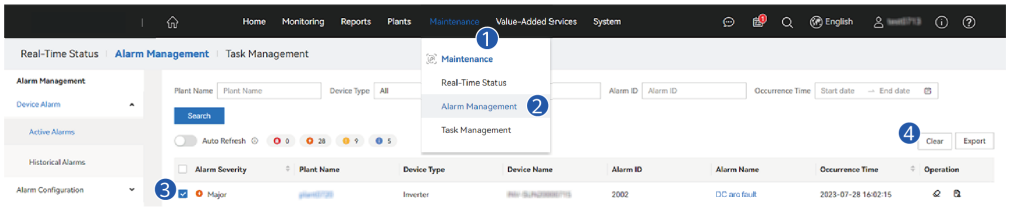

  Log in using the owner account with plant management rights. Click the plant name on the **Home** page to access the plant page, and click **OK** as prompted to clear the alarm.

I PV String Access Detection

This function is used to detect and identify the operating status of PV strings connected to an inverter. The status can be **Unidentified**, **Not connected**, **Single string**, **2-in-1 string**, **Lost string**, **2-in-1 string – full loss**, or **2-in-1 string – single string loss**. Enable this function if you need to detect the PV string status. Otherwise, disable this function.

Function

- PV string access detection applies to large-scale commercial and utility-scale PV plants with PV strings facing the same direction.
- In AC or DC power limiting scenarios:
  - If the PV string access type is not identified, **PV Status** will be displayed as **Not connected**. The PV string access type can be identified only when the inverter restores to the non-power limiting state and the current of all connected PV strings reaches **Startup current**.
  - After setting parameters, you can view the PV string access status on the **Running Info** screen.

Procedure

Step 1 Log in to the app and choose **Services** > **Device Commissioning**. The **Device Commissioning** screen is displayed.

Step 2 Choose **Maintenance** > **PV string access detection**. The parameter setting screen is displayed.

 Copyright © Huawei Technologies Co., Ltd.

Figure I-1 PV string access detection

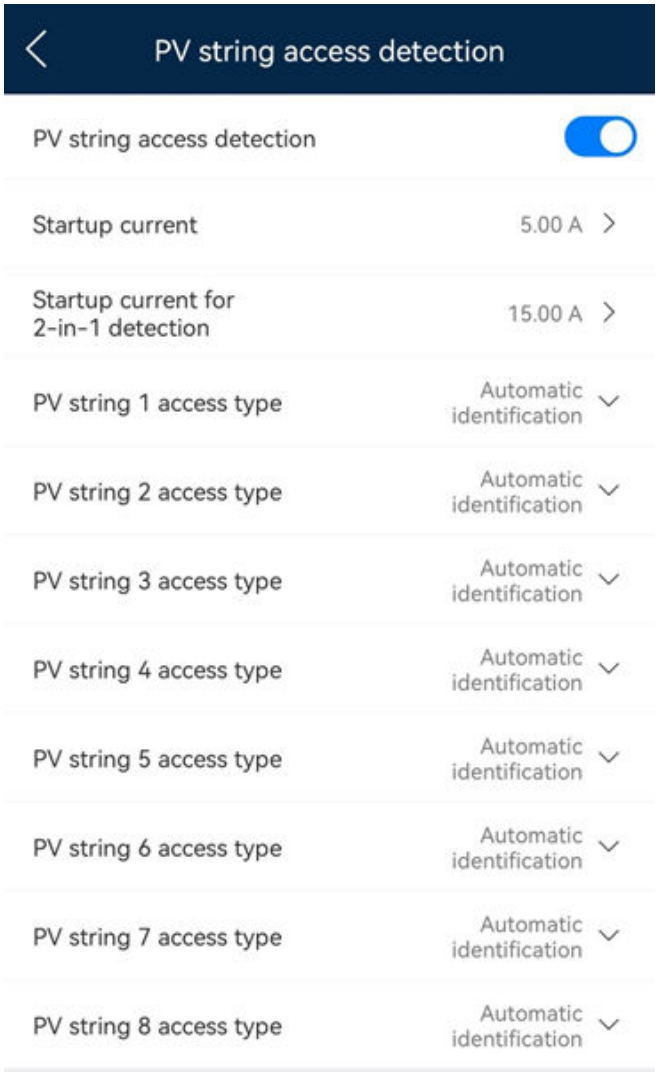

No.	Parameter	Description	Remarks
1	**PV string access detection**	The default value of **PV string access detection** is **Disabled**. After the inverter connects to the power grid properly, you can set this parameter to **Enabled**.	-
2	**Startup current**	When the current of all connected PV strings reaches the preset value, the PV string access detection function is enabled. **NOTE** Startup current setting rules: • Startup current = I_{sc} (S_{tc}) x 0.6 (rounded up). For details about I_{sc} (S_{tc}), see the PV module nameplate. • Default startup current (5 A): applicable to the scenarios where the short-circuit current I_{sc} (S_{tc}) is greater than 8 A for the monocrystalline and polycrystalline PV modules.	This parameter is displayed when **PV string access detection** is set to **Enabled**.

Copyright © Huawei Technologies Co., Ltd.

No.	Parameter	Description	Remarks
3	**Startup current for 2-in-1 detection**	When the current of a PV string reaches the threshold specified by **Startup current for 2-in-1 detection**, the PV string is automatically identified as 2-in-1. The default value is recommended.	
4	PV string *N* access type **NOTE** *N* is the DC input terminal number of the inverter.	Set this parameter based on the type of the PV string connected to DC input terminal *N* of the inverter. Currently, the options are as follows: **Automatic identification** (default value), **Not connected**, **Single string**, and **2-in-1 string**. The default value is recommended. If the value is incorrectly set, the PV string access type may be incorrectly identified and false alarms may be generated for the PV string access status.	

----End

 Copyright © Huawei Technologies Co., Ltd.

J Smart I-V Curve Diagnosis

For details, see the Smart I-V Curve Diagnosis user manual.

 Copyright © Huawei Technologies Co., Ltd.

K Locating Insulation Resistance Faults

If the ground impedance of a PV string connected to the inverter is too low, the inverter generates a **Low insulation resistance** alarm.

The possible causes are as follows:

- A short circuit has occurred between the PV array and the ground.
- The ambient air of the PV array is damp and the insulation between the PV array and the ground is poor.

After the **Low insulation resistance** alarm is reported by the inverter, insulation resistance fault location is automatically triggered. If the fault location is successful, the location information is displayed on the **Alarm details** screen of the **Low insulation resistance** alarm on the app.

Log in to the app, choose **Alarm** > **Active alarm**, select **Low insulation resistance** to enter the **Alarm details** screen.

Figure K-1 Alarm details

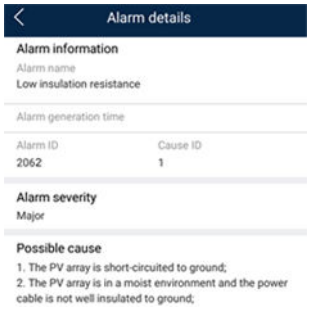

NOTE

- The positive and negative terminals of a PV string are respectively connected to the PV+ and PV– terminals of the inverter. The PV– terminal represents a possibility of 0% for the short-circuit position and the PV+ terminal represents a possibility of 100% for the short-circuit position. Other percentages indicate that the fault occurs on a PV module or cable in the PV string.
- Possible fault position = Total number of PV modules in a PV string x Percentage of possible short-circuit positions. For example, if a PV string consists of 14 PV modules and the percentage of the possible short-circuit position is 34%, the possible fault position is 4.76 (14 x 34%), indicating that the fault is located near PV module 4, including the previous and the next PV modules and the cables. The inverter has a detection precision of ±1 PV module.
- The possible faulty PV string MPPT1 corresponds to PV1 and PV2, and the possible faulty PV string MPPT2 corresponds to PV3 and PV4. The fault can be located only to the MPPT level. Perform the following steps to connect the PV strings corresponding to the faulty MPPT to the inverter one by one to further locate and rectify the fault.
- When a non-short-circuit fault occurs, the possible short-circuit percentage is not displayed. If the insulation resistance is greater than 0.001 MΩ, the fault is not related to short circuit. Check all PV modules in the faulty PV string one by one to locate and rectify the fault.

Figure K-2 Percentage of short-circuit positions

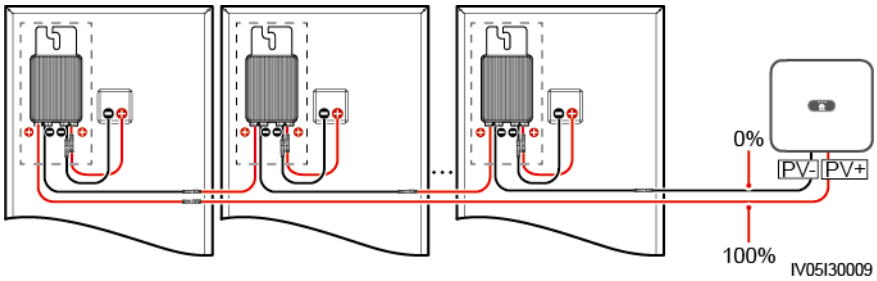

Procedure

NOTICE

If the irradiance or the PV string voltage is too high, the insulation resistance fault location may fail. In this case, the fault location status on the **Alarm details** screen is **Conditions not met**. Perform the following steps to connect PV strings to the inverter one by one to locate the fault. If the system is not configured with any optimizer, skip the corresponding optimizer operations.

Step 1 Ensure that the AC connections are normal. Log in to the app, choose **Maintenance** > **Inverter ON/OFF** on the home screen, and send a shutdown command. Set **DC SWITCH** to **OFF**.

Step 2 Connect one PV string to the inverter, and set **DC SWITCH** to **ON**. If the inverter status is **Shutdown: Command**, log in to the app, choose **Maintenance** > **Inverter ON/OFF** on the home screen, and send a startup command.

Step 3 Choose **Alarm** on the home screen, enter the **Active alarm** screen, and check whether a **Low insulation resistance** alarm is reported.

 Copyright © Huawei Technologies Co., Ltd.

- If no **Low insulation resistance** alarm is reported 1 minute after the DC side is powered on, choose **Maintenance** > **Inverter ON/OFF** on the home screen, and send a shutdown command. Set **DC SWITCH** to **OFF**. Go to **Step 2** and check rest of the PV strings one by one.
- If a **Low insulation resistance** alarm is reported 1 minute after the DC side is powered on, check the percentage of possible short-circuit positions on the **Alarm details** screen and calculate the location of the possible faulty PV module based on the percentage. Then go to **Step 4**.

Step 4 Log in to the app, choose **Maintenance** > **Inverter ON/OFF** on the home screen, and send a shutdown command. Set **DC SWITCH** to **OFF**. Check whether the connectors or DC power cables between the optimizer and PV module, between adjacent PV modules, or between adjacent optimizers on the possible fault position are damaged.

- If yes, replace the damaged connectors or DC power cables, and then set **DC SWITCH** to **ON**. If the inverter status is **Shutdown: Command**, choose **Maintenance** > **Inverter ON/OFF**, and send a startup command. View alarm information.
  - If no **Low insulation resistance** alarm is reported 1 minute after the DC side is powered on, troubleshoot the insulation resistance fault of the PV string. Log in to the app, choose **Maintenance** > **Inverter ON/OFF** on the home screen, and send a shutdown command. Set **DC SWITCH** to **OFF**. Go to **Step 2** and check rest of the PV strings one by one. Then, go to **Step 8**.
  - If the DC side is powered on 1 minute later, the **Low insulation resistance** alarm is still reported. Log in to the app, choose **Maintenance** > **Inverter ON/OFF** on the home screen, and send a shutdown command. Set **DC SWITCH** to **OFF** and go to **Step 5**.
- If no, go to **Step 5**.

Step 5 Disconnect the possible faulty PV module and the paired optimizer from the PV string, and use a DC extension cable with an MC4 connector to connect the PV module or optimizer adjacent to the possible faulty PV module. Set **DC SWITCH** to **ON**. If the inverter status is **Shutdown: Command**, choose **Maintenance** > **Inverter ON/OFF** on the home screen, and send a startup command. View alarm information.

- If no **Low insulation resistance** alarm is reported 1 minute after the DC side is powered on, the fault occurred on the disconnected PV module and optimizer. Choose **Maintenance** > **Inverter ON/OFF**, send a shutdown command, and set **DC SWITCH** to **OFF**. Go to **Step 7**.
- If the **Low insulation resistance** alarm is reported 1 minute after the DC side is powered on, the fault did not occur on the disconnected PV module and optimizer. Go to **Step 6**.

Step 6 Log in to the app, choose **Maintenance** > **Inverter ON/OFF** on the home screen, and send a shutdown command. Set **DC SWITCH** to **OFF**, reconnect the disconnected PV module and optimizer, and repeat **Step 5** to check the PV modules and optimizers adjacent to the possible fault location.

Step 7 Determine the position of the ground insulation fault:

- Disconnect the possible faulty PV module from the optimizer.

 Copyright © Huawei Technologies Co., Ltd.

- Connect the possible faulty optimizer to the PV string.
- Set **DC SWITCH** to **ON**. If the inverter status is **Shutdown: Command**, choose **Maintenance** > **Inverter ON/OFF**, and send a startup command. View alarm information.
  - If no **Low insulation resistance** alarm is reported 1 minute after the DC side is powered on, the fault is on the possible faulty PV module.
  - If the **Low insulation resistance** alarm is reported 1 minute after the DC side is powered on, the fault is on the possible faulty optimizer.
- Log in to the app, choose **Maintenance** > **Inverter ON/OFF** on the home screen, and send a shutdown command. Set **DC SWITCH** to **OFF**, replace the faulty component, and complete troubleshooting the insulation resistance fault. Go to **Step 2** and check rest of the PV strings one by one. Then, go to **Step 8**.

Step 8 Set **DC SWITCH** to **ON**. If the inverter status is **Shutdown: Command**, choose **Maintenance** > **Inverter ON/OFF**, and send a startup command.

----End

 Copyright © Huawei Technologies Co., Ltd.

L Connecting to a Device on the App (the Device Supports WLAN)

NOTICE

- When directly connecting your phone to a device, ensure that your phone is within the WLAN coverage of the device.

Step 1 Start device commissioning.

Figure L-1 Method 1: mobile phone connected to the Internet

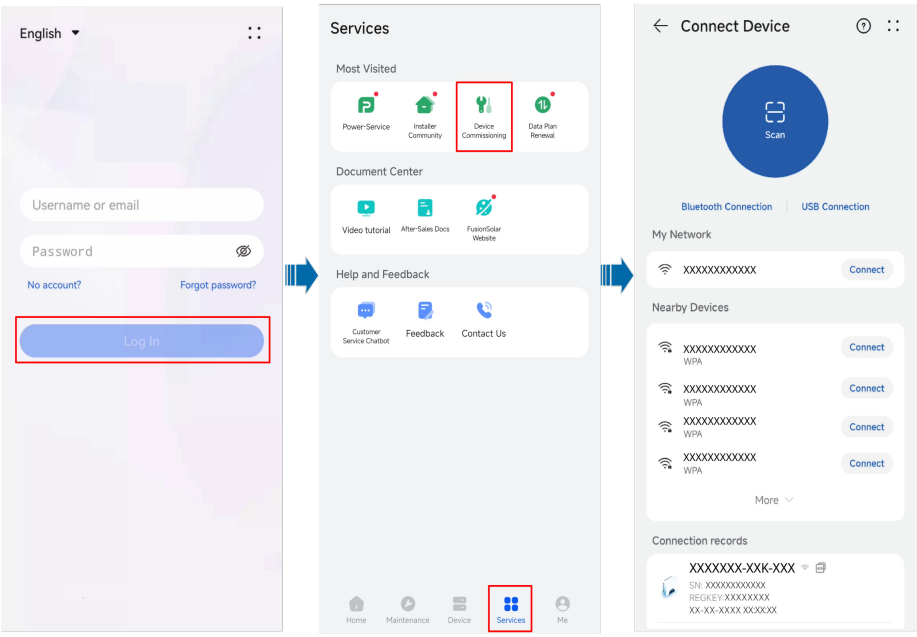

 Copyright © Huawei Technologies Co., Ltd.

Figure L-2 Method 2: mobile phone not connected to the Internet

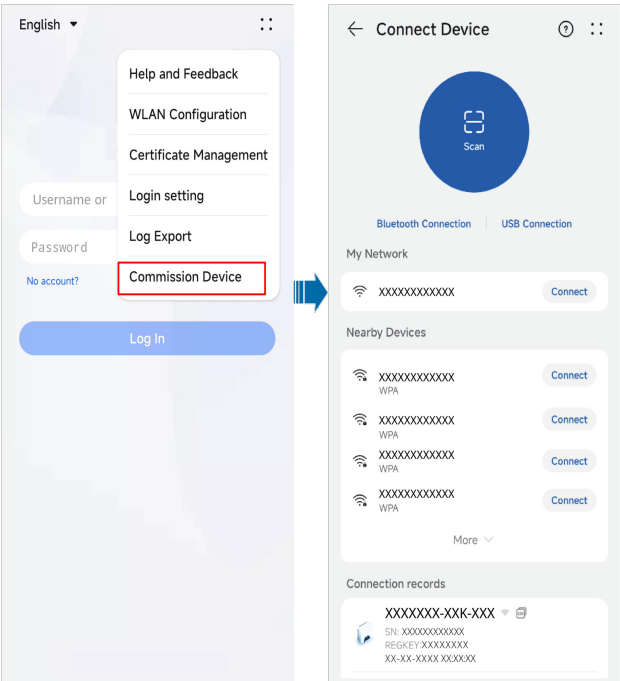

Step 2 Connect to the device WLAN.

Tap **Scan**. On the scanning screen, align the QR code of the device WLAN with the scanning box to automatically scan and connect to the device.

NOTE

- The WLAN name of a device consists of "Device name-Device SN." (The last six digits of the WLAN names of some devices are the same as the last six digits of the device SNs.)
- For the first connection, log in with the initial password. You can obtain the initial WLAN password from the label on the device.
- Ensure account security by changing the password periodically. Your password might be stolen or cracked if it is left unchanged for extended periods. If a password is lost, the device cannot be accessed. In these cases, the Company shall not be liable for any loss.
- If the login screen is not displayed after you scan the QR code, check whether your phone is correctly connected to the device WLAN. If not, manually select and connect to the WLAN.
- If **This WLAN network has no Internet access. Connect anyway?** message is displayed when you connect to the built-in WLAN, tap **CONNECT**. Otherwise, you cannot log in to the system. The actual UI and messages may vary with mobile phones.

Step 3 Log in to the device commissioning screen as **Installer**.

 Copyright © Huawei Technologies Co., Ltd.

NOTICE

- After completing the deployment settings, the installer shall remind the owner to access the local commissioning screen of the device and set the login password of the owner account as prompted.
- Ensure account security by changing the password periodically. Your password might be stolen or cracked if it is left unchanged for extended periods. If a password is lost, the device cannot be accessed. In these cases, the Company shall not be liable for any loss.

----End

Copyright © Huawei Technologies Co., Ltd.

M Certificate Management and Maintenance

M.1 Initial Certificate Risk Disclaimer

Huawei's initial certificates are mandatory identity credentials for Huawei devices before delivery. The disclaimer statements for using the certificates are as follows:

1. Huawei's initial certificates are used only to establish initial security channels for devices to access the customer network during deployment.
2. Initial certificates have a validity period. The validity period of Huawei's root certificates expires in 2041 and 2099, respectively, and the validity period of identity certificates expires earlier than that of root certificates. For details about how to query the expiration time of identity certificates, see **M.4 Querying the Validity Period of the Identity Certificate**.
3. After devices access the customer network, the management responsibilities of the devices and digital certificates are transferred to the customer. Huawei recommends that the customer replace the initial certificates used by devices on the live network with customer's own certificates, and use certificates with a short validity period and periodically replace the certificates in accordance with industry best practices. This helps mitigate the risk of private key leakage of digital certificates and prevent service interruption caused by certificate expiration.

For details about the rights and responsibilities related to initial certificates, see **Rights and Responsibilities of Initial Digital Certificates on Huawei Devices**.

 Copyright © Huawei Technologies Co., Ltd.

M.2 Application Scenarios of Initial Certificates

Usage	Scenario	Replacement Guide
App communication certificate	Authenticates the validity of the inverter when the mobile app connects to and communicates with the inverter through Modbus-TCP.	**M.3 Updating a Certificate**

M.3 Updating a Certificate

Prerequisites

You have applied for a new certificate from the CA and have obtained the new certificate files. **Table M-1** lists the certificate requirements.

Table M-1 Certificate requirements

Parameter	Requirement
Certificate signature algorithm	Use industry-leading security algorithms, such as sha256WithRSAEncryption or sha256ECDSA.
Key length	• For keys encrypted using RSA, the recommended length is 3072 bits or longer. • For keys encrypted using ECDSA, the length can be 256 or 384 bits. **NOTE** RSA keys shorter than 2048 bits or ECDSA keys shorter than 256 bits are insecure. For security purposes, ensure that the private key of the ER certificate is an RSA key of 3072 bits or longer or an ECDSA key of 256 bits or longer.
Certificate storage format	.crt and .cer are supported. The certificate in .crt format must be encoded using Base64. • The certificate file in .crt format is as follows: – **client.crt**: identity certificate file – **client_key.pem**: private key of the identity certificate • The certificate file in .cer format is as follows: – **client.cer**: identity certificate file – **client_key.pem**: private key of the identity certificate
Private key file format	PKCS#8 format.

 Copyright © Huawei Technologies Co., Ltd.

Parameter	Requirement
Password complexity of the private key file	Contain 1 to 64 characters. (Recommended) Contain 8 to 64 characters, including at least two types of the following: ● Uppercase letters ● Lowercase letters ● Digits ● Special characters (excluding <>;+&/\\|%(),`$)

Procedure

Step 1 Log in to the app, connect to the inverter, and choose **Set** > **Communication settings** > **Certificate management**.

Step 2 Select the certificate to be replaced, upload the corresponding app certificates (root certificate, customer certificate, and key file), and enter the key password to replace the certificate.

Step 3 After the replacement is complete, tap **Replace current certificate**.

----End

M.4 Querying the Validity Period of the Identity Certificate

The inverter will trigger an alarm 60 days before the certificate expires to remind you to update the certificate in a timely manner.

- Certificates encrypted using the sha256WithRSAEncryption algorithm are valid until 2041.
- Certificates encrypted using the sha256ECDSA algorithm are valid until 2099.

 Copyright © Huawei Technologies Co., Ltd.

N Contact Information

If you have any questions about this product, please contact us.

https://digitalpower.huawei.com

Path: **About Us** > **Contact Us** > **Global Service Hotlines**

To ensure faster and better services, we kindly request your assistance in providing the following information:

- Model
- Serial number (SN)
- Software version
- Alarm ID or name
- Brief description of the fault symptom

 Copyright © Huawei Technologies Co., Ltd.

NOTE

EU Representative Information: Huawei Technologies Hungary Kft.
Add.: HU-1133 Budapest, Váci út 116-118., 1. Building, 6. floor.
Email: hungary.reception@huawei.com

O Digital Power Customer Service

https://digitalpower.huawei.com/robotchat/

 Copyright © Huawei Technologies Co., Ltd.

P Acronyms and Abbreviations

A	
AFCI	arc-fault circuit interrupter
L	
LED	light emitting diode
M	
MBUS	monitoring bus
MPP	maximum power point
MPPT	maximum power point tracking
P	
PE	protective earthing
PID	potential induced degradation
PV	photovoltaic
R	
RCD	residual current device

 Copyright © Huawei Technologies Co., Ltd.