SUN2000-(75KTL-M1, 100KTL-M2, 110KTL-M2, 115KTL-M2)

User Manual

Issue	30
Date	2026-09-28

HUAWEI TECHNOLOGIES CO., LTD.

Copyright © Huawei Technologies Co., Ltd. 2026. All rights reserved.

No part of this document may be reproduced or transmitted in any form or by any means without prior written consent of Huawei Technologies Co., Ltd.

Trademarks and Permissions

HUAWEI and other Huawei trademarks are trademarks of Huawei Technologies Co., Ltd.
All other trademarks and trade names mentioned in this document are the property of their respective holders.

Notice

The purchased products, services and features are stipulated by the contract made between Huawei and the customer. All or part of the products, services and features described in this document may not be within the purchase scope or the usage scope. Unless otherwise specified in the contract, all statements, information, and recommendations in this document are provided "AS IS" without warranties, guarantees or representations of any kind, either express or implied.

The information in this document is subject to change without notice. Every effort has been made in the preparation of this document to ensure accuracy of the contents, but all statements, information, and recommendations in this document do not constitute a warranty of any kind, express or implied.

Huawei Technologies Co., Ltd.

Address: Huawei Industrial Base
Bantian, Longgang
Shenzhen 518129
People's Republic of China

Website: https://e.huawei.com

About This Document

Purpose

This document describes the following inverter models (also referred to as SUN2000) in terms of the safety precautions, product introduction, installation, electrical connections, power-on and commissioning, maintenance, and technical specifications. Read this document carefully before installing and operating the inverter.

- SUN2000-115KTL-M2
- SUN2000-110KTL-M2
- SUN2000-100KTL-M2
- SUN2000-75KTL-M1

Intended Audience

This document is intended for photovoltaic (PV) plant operators and qualified electricians.

Symbol Conventions

The symbols that may be found in this document are defined as follows.

Symbol	Description
DANGER	Indicates a hazard with a high level of risk which, if not avoided, will result in death or serious injury.
WARNING	Indicates a hazard with a medium level of risk which, if not avoided, could result in death or serious injury.
CAUTION	Indicates a hazard with a low level of risk which, if not avoided, could result in minor or moderate injury.

Copyright © Huawei Technologies Co., Ltd.

Symbol	Description
NOTICE	Indicates a potentially hazardous situation which, if not avoided, could result in equipment damage, data loss, performance deterioration, or unanticipated results. NOTICE is used to address practices not related to personal injury.
NOTE	Supplements the important information in the main text. NOTE is used to address information not related to personal injury, equipment damage, and environment deterioration.

Change History

Changes between document issues are cumulative. The latest document issue contains all the changes made in earlier issues.

Issue 30 (2026-09-28)

Updated **A Grid Codes**.

Issue 29 (2026-08-28)

Updated **1.3 Environment Requirements**.

Updated **4.3 Determining the Installation Position**.

Issue 28 (2026-06-30)

Updated **1.1 Personal Safety**.

Updated **7.2 Power-Off for Maintenance**.

Updated **A Grid Codes**.

Issue 27 (2026-04-20)

Updated **2.3.1 Typical Networking**.

Updated **5.7.3 Connecting Cables to Amphenol Helios H4 Terminals**.

Updated **5.7.4 Connecting Cables to Staubli MC4 Terminals**.

Updated **7.2 Power-Off for Maintenance**.

Updated **9 Technical Specifications**.

Issue 26 (2026-03-30)

Deleted "Domain Name List of Management Systems."

Updated **2.5.2 Indicator Status**.

Copyright © Huawei Technologies Co., Ltd.

Updated **6.3 Power-On and Commissioning**.

Updated **6.4 Upgrading the Inverter**.

Updated **7.1 Shutdown and Power-Off**.

Updated **7.2 Power-Off for Maintenance**.

Updated **9 Technical Specifications**.

Updated **B Resetting a Password**.

Updated **D AFCI**.

Issue 25 (2025-12-20)

Updated **2.5.2 Indicator Status**.

Updated **6.4 Upgrading the Inverter**.

Updated **A Grid Codes**.

Issue 24 (2025-11-20)

Updated **9 Technical Specifications**.

Issue 23 (2025-10-15)

Added **2.3 Networking Application**.

Updated **5.2 Preparing Cables**.

Updated **6.3 Power-On and Commissioning**.

Updated **9 Technical Specifications**.

Issue 22 (2025-08-22)

Updated **5.7 Connecting DC Input Power Cables**.

Updated **B Resetting a Password**.

Updated **C Setting RCD Parameters**.

Issue 21 (2025-07-15)

Updated **2.5 Product Appearance**.

Updated **5.7 Connecting DC Input Power Cables**.

Updated **5.9 (Optional) Installing the Smart Dongle**.

Issue 20 (2025-04-01)

Updated **A Grid Codes**.

Issue 19 (2025-03-10)

Updated **2.5.2 Indicator Status**.

 Copyright © Huawei Technologies Co., Ltd.

Updated **6.3 Power-On and Commissioning**.

Updated **9 Technical Specifications**.

Updated **A Grid Codes**.

Issue 18 (2024-12-13)

Updated **A Grid Codes**.

Issue 17 (2024-11-25)

Updated **5.2 Preparing Cables**.

Issue 16 (2024-08-20)

Updated **About This Document**.

Updated **1.2 Electrical Safety**.

Updated **2.1 Product Model**.

Updated **2.4 Label Description**.

Updated **3 Inverter Storage**.

Updated **4.3 Determining the Installation Position**.

Updated **9 Technical Specifications**.

Issue 15 (2024-03-10)

Added **6.3.3.6.1 Setting Feed-in at Limited Current**.

Updated **A Grid Codes**.

Added **D AFCI**.

Issue 14 (2024-02-02)

Updated **1.3 Environment Requirements**.

Updated **2.1 Product Model**.

Updated **2.4 Label Description**.

Updated **3 Inverter Storage**.

Updated **4.3 Determining the Installation Position**.

Updated **9 Technical Specifications**.

Issue 13 (2024-01-12)

Updated **9 Technical Specifications**.

Issue 12 (2023-12-25)

Updated **7.4 Alarm Reference**.

 Copyright © Huawei Technologies Co., Ltd.

Updated **A Grid Codes**.

Issue 11 (2023-12-18)

Updated **2.4 Label Description**.

Updated **2.5 Product Appearance**.

Updated **5.7 Connecting DC Input Power Cables**.

Updated **7.4 Alarm Reference**.

Issue 10 (2023-11-20)

Updated **9 Technical Specifications**.

Issue 09 (2023-10-10)

Updated **5.7.1 Cable Connection Description**.

Issue 08 (2023-07-20)

Updated **A Grid Codes**.

Issue 07 (2023-04-30)

Updated **4.2 Tools**.

Updated **5.7 Connecting DC Input Power Cables**.

Updated **5.9 (Optional) Installing the Smart Dongle**.

Updated **9 Technical Specifications**.

Issue 06 (2023-03-13)

Updated **5.2 Preparing Cables**.

Updated **5.7 Connecting DC Input Power Cables**.

Issue 05 (2023-01-31)

Updated **4.2 Tools**.

Updated **5.7 Connecting DC Input Power Cables**.

Issue 04 (2023-01-10)

Updated **1 Safety Information**.

Updated **4.5 Installing the Inverter**.

Updated **5.6 Connecting an AC Output Power Cable**.

Updated **5.7 Connecting DC Input Power Cables**.

Updated **6.2 System Power-On**.

 Copyright © Huawei Technologies Co., Ltd.

Updated **7 Maintenance**.

Updated **9 Technical Specifications**.

Issue 03 (2022-09-30)

Deleted the SUN2000-100KTL-INM2 model.

Updated **5.2 Preparing Cables**.

Updated **5.6 Connecting an AC Output Power Cable**.

Updated **5.9 (Optional) Installing the Smart Dongle**.

Updated **7.4 Alarm Reference**.

Updated **9 Technical Specifications**.

Added **F Contact Information**.

Issue 02 (2022-06-30)

Added sections about setting app parameters and resetting passwords; updated the information about insulated tools; updated the content about power-off for troubleshooting and technical specifications.

Updated **4.2 Tools**.

Updated **7.2 Power-Off for Maintenance**.

Updated **9 Technical Specifications**.

Issue 01 (2022-05-20)

This issue is used for first office application (FOA).

 Copyright © Huawei Technologies Co., Ltd.

Contents

About This Document ii

1 Safety Information 1

1.1 Personal Safety 2
1.2 Electrical Safety 4
1.3 Environment Requirements 7
1.4 Mechanical Safety 9

2 Overview 14

2.1 Product Model 14
2.2 Product Introduction 15
2.3 Networking Application 16
2.3.1 Typical Networking 16
2.3.1.1 RS485 Networking 17
2.3.1.2 MBUS Networking 18
2.3.2 Earthing Systems 20
2.4 Label Description 21
2.5 Product Appearance 23
2.5.1 Product Appearance 24
2.5.2 Indicator Status 27
2.6 Working Principles 28
2.6.1 Circuit Diagram 29
2.6.2 Working Modes 29

3 Inverter Storage 31

4 Installation 33

4.1 Check Before Installation 33
4.2 Tools 34
4.3 Determining the Installation Position 36
4.4 Installing the Mounting Bracket 41
4.4.1 Support Mounting 41
4.4.2 Wall Mounting 42
4.5 Installing the Inverter 44

5 Electrical Connections 48

5.1 Precautions....48
5.2 Preparing Cables....49
5.3 Connecting a PE Cable....53
5.4 Opening the Maintenance Compartment Door....54
5.5 (Optional) Installing the Power Cable of the Tracking System....57
5.6 Connecting an AC Output Power Cable....57
5.7 Connecting DC Input Power Cables....64
5.7.1 Cable Connection Description....64
5.7.2 Measuring the Insulation Resistance of PV Strings to the Ground....66
5.7.3 Connecting Cables to Amphenol Helios H4 Terminals....69
5.7.4 Connecting Cables to Staubli MC4 Terminals....72
5.8 Connecting RS485 communications cables....75
5.9 (Optional) Installing the Smart Dongle....77

6 Commissioning....81
6.1 Check Before Power-On....81
6.2 System Power-On....82
6.3 Power-On and Commissioning....83
6.3.1 Commissioning Methods and Process....83
6.3.2 Commissioning the SUN2000 (Using the SmartLogger)....84
6.3.2.1 Preparations and SmartLogger WebUI Login....84
6.3.2.2 Software Upgrade....84
6.3.2.3 Commissioning Using the Deployment Wizard....84
6.3.2.4 Parameter Settings....85
6.3.3 Commissioning the SUN2000 (Using the App)....85
6.3.3.1 Downloading and Installing the App....85
6.3.3.2 Registering an Installer Account....86
6.3.3.3 Quick Settings....86
6.3.3.4 Creating a Plant....86
6.3.3.5 Registering an Owner Account....86
6.3.3.6 Commissioning Functions and Features....86
6.3.3.6.1 Setting Feed-in at Limited Current....87
6.4 Upgrading the Inverter....91

7 Maintenance....93
7.1 Shutdown and Power-Off....93
7.2 Power-Off for Maintenance....94
7.3 Routine Maintenance....96
7.4 Alarm Reference....98
7.5 Replacing a Fan....98
7.6 Resetting and Turning On the DC Switch....102

8 Handling the Inverter....103
8.1 Removing the SUN2000....103

8.2 Packing the SUN2000 103
8.3 Disposing of the SUN2000 103
9 Technical Specifications 104
A Grid Codes 110
B Resetting a Password 128
B.1 Power-On and Power-Off 128
B.2 Resetting the Password After Connecting to the Device and Obtaining the Verification Code 129
B.3 Resetting the Password After Obtaining the Verification Code and Connecting to the Device 130
B.4 Resetting the Password on the SmartLogger WebUI 132
C Setting RCD Parameters 134
D AFCI 136
E Connecting to a Device on the App (the Device Does Not Support WLAN) 138
F Contact Information 140
G Digital Power Customer Service 142
H Acronyms and Abbreviations 143

1 Safety Information

Statement

Before transporting, storing, installing, operating, using, and/or maintaining the equipment, read this document, strictly follow the instructions provided herein, and follow all the safety instructions on the equipment and in this document. In this document, "equipment" refers to the products, software, components, spare parts, and/or services related to this document; "the Company" refers to the manufacturer (producer), seller, and/or service provider of the equipment; "you" refers to the entity that transports, stores, installs, operates, uses, and/or maintains the equipment.

The **DANGER**, **WARNING**, **CAUTION**, and **NOTICE** statements described in this document do not cover all the safety precautions. You also need to comply with relevant international, national, or regional standards and industry practices. **The Company shall not be liable for any consequences that may arise due to violations of safety requirements or safety standards concerning the design, production, and usage of the equipment.**

The equipment shall be used in an environment that meets the design specifications. Otherwise, the equipment may be faulty, malfunctioning, or damaged, which is not covered under the warranty. The Company shall not be liable for any property loss, personal injury, or even death caused thereby.

Comply with applicable laws, regulations, standards, and specifications during transportation, storage, installation, operation, use, and maintenance.

Do not perform reverse engineering, decompilation, disassembly, adaptation, implantation, or other derivative operations on the equipment software. Do not study the internal implementation logic of the equipment, obtain the source code of the equipment software, violate intellectual property rights, or disclose any of the performance test results of the equipment software.

The Company shall not be liable for any of the following circumstances or their consequences:

- Equipment damage due to force majeure such as earthquakes, floods, volcanic eruptions, debris flows, lightning strikes, fires, wars, armed conflicts, typhoons, hurricanes, tornadoes, and other extreme weather conditions
- Operation beyond the conditions specified in this document

 Copyright © Huawei Technologies Co., Ltd.

- Installation or use in environments that do not comply with international, national, or regional standards
- Installation or use by unqualified personnel
- Failure to follow the operation instructions or safety precautions on the product or in this document
- Unauthorized modifications to the product or software code or removal of the product
- Damage caused during transportation by you or a third party authorized by you
- Storage conditions that do not meet the requirements specified in this document
- Failure to comply with local laws, regulations, or related standards due to the materials and tools prepared by you
- Damage caused by your or a third party's negligence, intentional breach, gross negligence, or improper operations or damage not caused by the Company

1.1 Personal Safety

DANGER

Ensure that power is off during installation. Do not install or remove a cable with power on. Transient contact between the core of the cable and the conductor will generate electric arcs or sparks, which may cause a fire or personal injury.

DANGER

Non-standard and improper operations on the energized equipment may cause fire, electric shocks, or explosion, resulting in property damage, personal injury, or even death.

DANGER

Before operations, remove conductive objects such as watches, bracelets, bangles, rings, and necklaces to prevent electric shocks.

DANGER

During operations, use dedicated insulated tools to prevent electric shocks or short circuits. The dielectric withstanding voltage level must comply with local laws, regulations, standards, and specifications.

 Copyright © Huawei Technologies Co., Ltd.

DANGER

In rare fault scenarios, flammable gas mixtures may be generated inside the product. In this condition, operating a switch may cause the product to catch fire or allow a serious fault to propagate.

WARNING

During operations, wear personal protective equipment such as protective clothing, insulated shoes, goggles, safety helmets, and insulated gloves.

Figure 1-1 Personal protective equipment

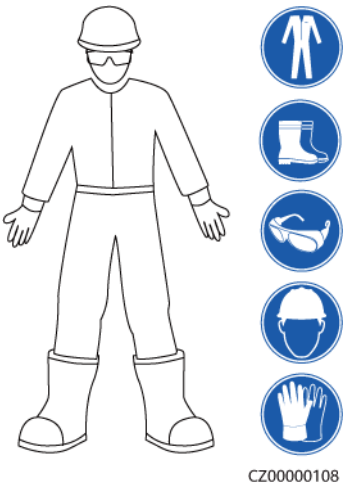

General Requirements

- Do not stop protective devices. Pay attention to the warnings, cautions, and related precautionary measures in this document and on the equipment.
- If there is a likelihood of personal injury or equipment damage during operations, immediately stop, report the case to the supervisor, and take feasible protective measures.
- Do not power on the equipment before it is installed or confirmed by professionals.
- Do not touch the power supply equipment directly or with conductors such as damp objects. Before touching any conductor surface or terminal, measure the voltage at the contact point to ensure that there is no risk of electric shock.
- Do not touch operating equipment because the enclosure is hot.
- Do not touch a running fan with your hands, components, screws, tools, or boards. Otherwise, personal injury or equipment damage may occur.
- In the case of a fire, immediately leave the building or the equipment area and activate the fire alarm or call emergency services. Do not enter the affected building or equipment area under any circumstances.

Copyright © Huawei Technologies Co., Ltd.

Personnel Requirements

- Only professionals and trained personnel are allowed to operate the equipment.
  - Professionals: personnel who are familiar with the working principles and structure of the equipment, trained or experienced in equipment operations, and fully aware of the sources and degree of various potential hazards in equipment installation, operation, maintenance
  - Trained personnel: personnel who are trained in technology and safety, have required experience, are aware of possible hazards on themselves in certain operations, and are able to take protective measures to minimize the hazards on themselves and other people
- Personnel who plan to install or maintain the equipment must receive adequate training, be able to correctly perform all operations, and understand all necessary safety precautions and local relevant standards.
- Only qualified professionals or trained personnel are allowed to install, operate, and maintain the equipment.
- Only qualified professionals are allowed to remove safety facilities and inspect the equipment.
- Personnel who will perform special tasks such as electrical operations, working at heights, and operations of special equipment must possess the required local qualifications.
- Only authorized professionals are allowed to replace the equipment or components (including software).
- Only personnel who need to work on the equipment are allowed to access the equipment.

1.2 Electrical Safety

DANGER

Before connecting cables, ensure that the equipment is intact. Otherwise, electric shocks or fires may occur.

DANGER

Non-standard and improper operations may result in fire or electric shocks.

DANGER

Prevent foreign matter from entering the equipment during operations. Otherwise, short circuits, equipment damage, load power derating, power failure, or personal injury may occur.

 Copyright © Huawei Technologies Co., Ltd.

WARNING

For the equipment that needs to be grounded, install the ground cable first when installing the equipment and remove the ground cable last when removing the equipment.

WARNING

During the installation of PV strings and the inverter, the positive or negative terminals of PV strings may be short-circuited to ground if the power cables are not properly installed or routed. In this case, an AC or DC short circuit may occur and damage the inverter. The resulting device damage is not covered under any warranty.

CAUTION

Do not route cables near the air intake or exhaust vents of the equipment.

CAUTION

The components (such as power distribution boxes, circuit breakers, and cables) used for electrical connections shall comply with fire resistance and flame retardance standards (such as IEC 60670-1). The materials and structure shall meet fire safety requirements.

General Requirements

- Follow the procedures described in the document for installation, operation, and maintenance. Do not modify, retrofit, or alter the equipment without authorization (including, but not limited to, adding or removing components and cables), and do not change the installation sequence.
- Obtain approval from the national or local electric utility company before connecting the equipment to the grid.
- Observe the power plant safety regulations, such as the operation and work ticket mechanisms.
- Install temporary fences or warning ropes and hang "No Entry" signs around the operation area to keep unauthorized personnel away from the area.
- Before installing or removing power cables, turn off the switches of the equipment and its upstream and downstream switches.
- Before performing operations on the equipment, check that all tools meet the requirements and record the tools. After the operations are complete, collect all of the tools to prevent them from being left inside the equipment.
- Before installing power cables, check that cable labels are correct and cable terminals are insulated.

 Copyright © Huawei Technologies Co., Ltd.

- When installing the equipment, use a torque tool of a proper measurement range to tighten the screws. When using a wrench to tighten the screws, ensure that the wrench does not tilt and the torque error does not exceed 10% of the specified value.
- Ensure that bolts are tightened with a torque tool and marked in red and blue after double-check. Installation personnel mark tightened bolts in blue. Quality inspection personnel confirm that the bolts are tightened and then mark them in red. (The marks must cross the edges of the bolts.)

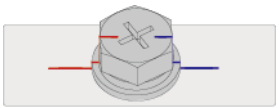

- If the equipment has multiple inputs, disconnect all the inputs and wait until the equipment is completely powered off before performing operations on the equipment.
- Before maintaining a downstream electrical or power distribution device, turn off the output switch on the power supply equipment.
- During equipment maintenance, attach "No switching on" labels near the upstream and downstream switches or circuit breakers as well as warning signs to prevent accidental connection. The equipment can be powered on only after troubleshooting is complete.
- Do not open equipment panels.
- Check equipment connections periodically, ensuring that all screws are securely tightened.
- Only qualified professionals can replace a damaged cable.
- Do not scrawl, damage, or block any labels or nameplates on the equipment. Promptly replace labels that have worn out.
- Do not use solvents such as water, alcohol, or oil to clean electrical components inside or outside of the equipment.
- The surge protection of the PV system and the building where the PV system is installed shall comply with local standards.

Grounding

- Ensure that the grounding impedance of the equipment complies with local electrical standards.
- Ensure that the equipment is connected permanently to the protective ground. Before operating the equipment, check its electrical connection to ensure that it is reliably grounded.
- Do not operate the equipment in the absence of a properly installed ground conductor.
- Do not damage the ground conductor.

Cabling Requirements

- When selecting, installing, and routing cables, follow local safety regulations and rules.
- When routing power cables, ensure that there is no coiling or twisting. Do not join or weld power cables. If necessary, use a longer cable.

- Ensure that all cables are properly connected and insulated, and meet specifications.
- Ensure that the cables are protected from mechanical stress, overheating, and corrosion.
- Ensure that cables are not squeezed, torn, warped, or whitened.
- Ensure that the slots and holes for routing cables are free from sharp edges, and that the positions where cables are routed through pipes or cable holes are equipped with cushion materials to prevent the cables from being damaged by sharp edges or burrs.
- Ensure that cables of the same type are bound together neatly and straight and that the cable sheath is intact. When routing cables of different types, ensure that they are away from each other without entanglement and overlapping.
- Secure buried cables using cable supports and cable clips. Ensure that the cables in the backfill area are in close contact with the ground to prevent cable deformation or damage during backfilling.
- If the external conditions (such as the cable layout or ambient temperature) change, verify the cable usage in accordance with the IEC-60364-5-52 or local laws and regulations. For example, check that the current-carrying capacity meets requirements.
- When routing cables, reserve at least 30 mm clearance between the cables and heat-generating components or areas. This prevents deterioration or damage to the cable insulation layer.

1.3 Environment Requirements

DANGER

Do not expose the equipment to flammable or explosive gas or smoke. Do not perform any operation on the equipment in such environments.

DANGER

Do not store any flammable or explosive materials in the equipment area.

DANGER

Do not place the equipment near heat sources or fire sources, such as smoke, candles, heaters, or other heating devices. Overheating may damage the equipment or cause a fire.

 Copyright © Huawei Technologies Co., Ltd.

WARNING

Install the equipment in an area far away from liquids. Do not install it under areas prone to condensation, such as under water pipes and air exhaust vents, or areas prone to water leakage, such as air conditioner vents, ventilation vents, or feeder windows of the equipment room. Ensure that no liquid enters the equipment to prevent faults or short circuits.

WARNING

To prevent damage or fire due to high temperature, ensure that the ventilation vents or heat dissipation systems are not obstructed or covered by other objects while the equipment is running.

General Requirements

- Store the equipment according to the storage requirements. Equipment damage caused by unqualified storage conditions is not covered under the warranty.
- Keep the installation and operating environments of the equipment within the allowed ranges. Otherwise, its performance and safety will be compromised.
- The operating temperature range provided in the equipment's technical specifications refers to the ambient temperatures in equipment's installation environment.
- Do not install, use, or operate outdoor equipment and cables (including but not limited to moving equipment, operating equipment and cables, inserting connectors to or removing connectors from signal ports connected to outdoor facilities, working at heights, performing outdoor installation, and opening doors) in harsh weather conditions such as lightning, rain, snow, and level 6 or stronger wind.
- Do not install the equipment in an environment with dust, smoke, volatile or corrosive gases, infrared and other radiations, organic solvents, or salty air.
- Do not install the equipment in an environment with conductive metal or magnetic dust.
- Do not install the equipment in an area conducive to the growth of microorganisms such as fungus or mildew.
- Do not install the equipment in an area with strong vibration, noise, or electromagnetic interference. The equipment shall be installed in an environment with a magnetic field strength less than 4 Gauss. If the magnetic field strength is greater than or equal to 4 Gauss, the equipment may fail to work properly. If the magnetic field strength is high, for example, in a smeltery, you are advised to use a gauss meter to measure the magnetic field strength of the equipment installation position when the smelting equipment is running normally.
- Ensure that the site complies with local laws, regulations, and related standards.
- Ensure that the ground in the installation environment is solid, free from spongy or soft soil, and not prone to subsidence. The site must not be located

 Copyright © Huawei Technologies Co., Ltd.

in a low-lying land prone to water or snow accumulation, and the horizontal level of the site must be above the highest water level of that area in history.

- Do not install the equipment in a position that may be submerged in water.
- If the equipment is installed in a place with abundant vegetation, in addition to routine weeding, harden the ground underneath the equipment using cement or gravel (the area shall be greater than or equal to 3 m x 2.5 m).
- Do not install the equipment in salt-affected areas because it may be corroded. If the equipment has to be installed in a salt-affected area, consult the Company. A salt-affected area refers to the region within 500 m of the coast or prone to sea breeze. Regions prone to sea breeze vary with weather conditions (such as typhoons and monsoons) or terrains (such as dams and hills).
- Before opening doors during the installation, operation, and maintenance of the equipment, clean up any water, ice, snow, or other foreign objects on the top of the equipment to prevent foreign objects from falling into the equipment.
- When installing the equipment, ensure that the installation surface is solid enough to bear the weight of the equipment.
- After installing the equipment, remove the packing materials such as cartons, foam, plastics, and cable ties from the equipment area.

1.4 Mechanical Safety

WARNING

Ensure that all necessary tools are ready and inspected by a professional organization. Do not use tools that have signs of scratches or fail to pass the inspection or whose inspection validity period has expired. Ensure that the tools are secure and not overloaded.

WARNING

Do not drill holes into the equipment. Doing so may affect the sealing performance and electromagnetic containment of the equipment and damage components or cables inside. Metal shavings from drilling may short-circuit boards inside the equipment.

General Requirements

- Repaint any paint scratches caused during equipment transportation or installation in a timely manner. Equipment with scratches must not be exposed for an extended period of time.
- Do not perform operations such as arc welding and cutting on the equipment without evaluation by the Company.
- Do not install other devices on the top of the equipment without evaluation by the Company.

 Copyright © Huawei Technologies Co., Ltd.

- When performing operations over the top of the equipment, take measures to protect the equipment against damage.
- Use correct tools and operate them in the correct way.

Moving Heavy Objects

- Be cautious to prevent injury when moving heavy objects.

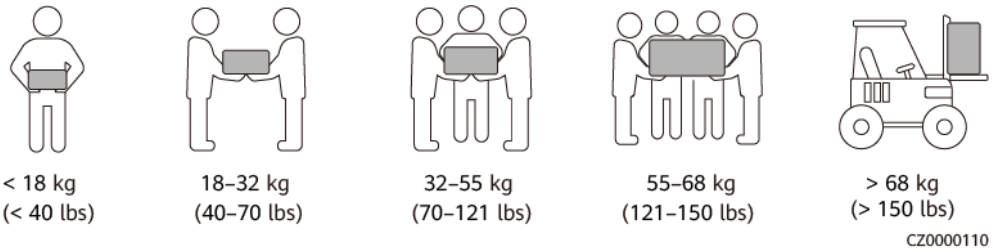

- If multiple persons need to move a heavy object together, determine the manpower and work division with consideration of height and other conditions to ensure that the weight is equally distributed.
- If two persons or more move a heavy object together, ensure that the object is lifted and landed simultaneously and moved at a uniform pace under the supervision of one person.
- Wear personal protective gears such as protective gloves and shoes when manually moving the equipment.
- To move an object by hand, approach to the object, squat down, and then lift the object gently and stably by the force of the legs instead of your back. Do not lift it suddenly or turn your body around.
- Do not quickly lift a heavy object above your waist. Place the object on a workbench that is half-waist high or any other appropriate place, adjust the positions of your palms, and then lift it.
- Move a heavy object stably with balanced force at an even and low speed. Put down the object stably and slowly to prevent any collision or drop from scratching the surface of the equipment or damaging the components and cables.
- When moving a heavy object, be aware of the workbench, slope, staircase, and slippery places. When moving a heavy object through a door, ensure that the door is wide enough to move the object and avoid bumping or injury.
- When transferring a heavy object, move your feet instead of turning your waist around. When lifting and transferring a heavy object, ensure that your feet point to the target direction of movement.
- When transporting the equipment using a pallet truck or forklift, ensure that the tynes are properly positioned so that the equipment does not topple. Before moving the equipment, secure it to the pallet truck or forklift using ropes. When moving the equipment, assign dedicated personnel to take care of it.
- Choose sea, roads in good conditions, or airplanes for transportation. Do not transport the equipment by railway. Avoid tilt or jolt during transportation.

Using Ladders

- Use wooden or insulated ladders when you need to perform live-line working at heights.

 Copyright © Huawei Technologies Co., Ltd.

- Platform ladders with protective rails are preferred. Single ladders are not recommended.
- Before using a ladder, check that it is intact and confirm its load bearing capacity. Do not overload it.
- Ensure that the ladder is securely positioned and held firm.

- When climbing up the ladder, keep your body stable and your center of gravity between the side rails, and do not overreach to the sides.
- When a step ladder is used, ensure that the pull ropes are secured.
- If a single ladder is used, the recommended angle for the ladder against the floor is 75 degrees, as shown in the following figure. A square can be used to measure the angle.

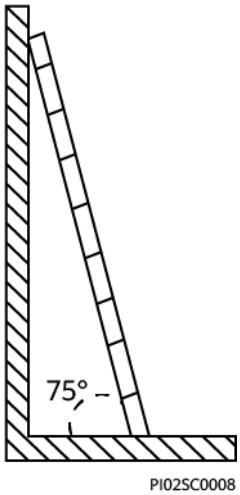

- If a single ladder is used, ensure that the wider end of the ladder is at the bottom, and take protective measures to prevent the ladder from sliding.
- If a single ladder is used, do not climb higher than the fourth rung of the ladder from the top.
- If you use a single ladder to climb up to a platform, ensure that the ladder is at least 1 m higher than the platform.

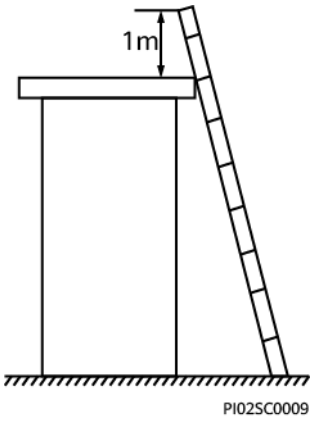

Hoisting

- Only trained and qualified personnel are allowed to perform hoisting operations.
- Install temporary warning signs or fences to isolate the hoisting area.
- Ensure that the foundation where hoisting is performed meets the load-bearing requirements.
- Before hoisting objects, ensure that hoisting tools are firmly secured onto a fixed object or wall that meets the load-bearing requirements.
- During hoisting, do not stand or walk under the crane or the hoisted objects.
- Do not drag steel ropes and hoisting tools or bump the hoisted objects against hard objects during hoisting.
- Ensure that the angle between two hoisting ropes is no more than 90 degrees, as shown in the following figure.

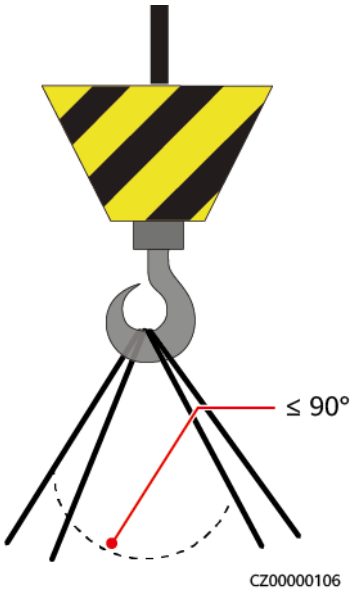

Drilling Holes

- Obtain consent from the customer and contractor before drilling holes.
- Wear protective equipment such as safety goggles and protective gloves when drilling holes.

- To avoid short circuits or other risks, do not drill holes into buried pipes or cables.
- When drilling holes, protect the equipment from shavings. After drilling, clean up any shavings.

 Copyright © Huawei Technologies Co., Ltd.

2 Overview

2.1 Product Model

Model Description

NOTICE

The SUN2000-110KTL-M2 is applicable only to the Chinese mainland. For other countries or regions, the Company does not provide quality assurance.

This document involves the following product models:

- SUN2000-115KTL-M2
- SUN2000-110KTL-M2
- SUN2000-100KTL-M2
- SUN2000-75KTL-M1

Figure 2-1 Model number

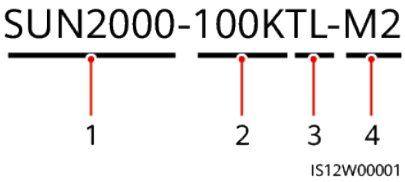

Copyright © Huawei Technologies Co., Ltd.

Table 2-1 Model description

No.	Meaning	Description
1	Product family identifier	SUN2000: grid-tied solar inverter
2	Power level identifier	• 115K: The power level is 115 kW. • 110K: The power level is 110 kW. • 100K: The power level is 100 kW. • 75K: The power level is 75 kW.
3	Topology identifier	TL: transformerless
4	Product series identifier	M1: product series with an input voltage level of 1100 V DC M2: product series with an input voltage level of 1100 V DC

NOTE

SUN2000-75KTL-M1: CNPJ do importador: 13.846.269/0001-35

Model Identification

You can obtain the inverter model from the model label on the external package and the nameplate on the side of the enclosure.

Figure 2-2 Position of the model label on the external package

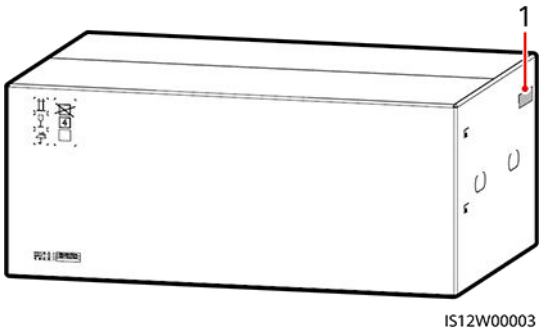

(1) Position of the model label

2.2 Product Introduction

Function

The SUN2000 is a grid-tied PV string inverter. It converts the DC power generated by PV strings into AC power and then feeds the power into the power grid.

Features

Smart

- Ten independent maximum power point tracking (MPPT) circuits and 20 PV string inputs: Flexible configuration of PV strings is supported.
- Smart PV module self-learning: Automatically detects PV module failures, helping rectify faults; optimizes the working mode to ensure that the system works optimally.
- Smart air cooling: Adjusts the fan speed based on the ambient temperature and load to ensure the service life of fans and avoid frequent maintenance.
- MBUS networking: Uses the existing power line for communication and does not require additional communications cables, which reduces the construction and maintenance costs and improves communication reliability and efficiency.
- Smart I-V curve diagnosis: Implements I-V scanning and health diagnosis for PV strings. In this way, potential risks and faults can be detected in time, improving the plant operation & maintenance (O&M) quality.

Safe

- Embedded DC and AC surge protective devices (SPDs) are used.
- The embedded residual current monitoring unit (RCMU) enables the inverter to be disconnected from the power grid immediately after the residual current exceeds the threshold.

2.3 Networking Application

2.3.1 Typical Networking

- The SUN2000 applies to grid-tied systems for utility-scale plants and commercial distributed projects.
- The SUN2000 supports RS485 communication and MBUS communication.
- The inverter is class B equipment of group 1 in RS485 networking or class A equipment of group 1 in MBUS networking.

NOTE

- Class A equipment: Class A equipment is the equipment suitable for use in all locations other than those allocated to residential environments and those directly connected to a low voltage power supply network which supplies buildings used for domestic purposes.
- Class B equipment: Equipment suitable for use in locations in residential environments and in establishments directly connected to a low voltage power supply network which supplies buildings used for domestic purposes.
- Group 1 equipment: Group 2 contains all industrial, scientific, and medical (ISM) RF equipment in which radio-frequency energy in the frequency range of 9 kHz to 400 GHz is intentionally generated and used or only used locally, in the form of electromagnetic radiation, inductive and/or capacitive coupling, for the treatment of material, for inspection/analysis purposes, or for transfer of electromagnetic energy. Group 1 contains all equipment which is not classified as group 2 equipment.

 Copyright © Huawei Technologies Co., Ltd.

NOTE

In non-low-voltage grid connection scenarios, the SUN2000-115KTL-M2 and SUN2000-100KTL-M2 need to be connected to an isolation transformer and overhead cabling shall be avoided.

NOTE

In the networking diagrams, — indicates the power cable, → indicates the power flow direction, and — and ∧∧∧ indicate the signal flow.

2.3.1.1 RS485 Networking

NOTICE

- To ensure fast system response, it is recommended that a maximum of 30 SUN2000s be cascaded to each COM port on the SmartLogger and that a maximum of 10 SUN2000s be cascaded to the Smart Dongle.
- If the SmartLogger3000 is used, the RS485 communication distance between the SUN2000 at the end and the SmartLogger must be less than or equal to 1000 m (baud rate: 9600 bit/s).
- If the SmartLogger5000B or SmartMGC5000B is used, the RS485 communication distance between the SUN2000 at the end and the SmartLogger must be as follows:
  - ≤ 1000 m (baud rate: 9600 bit/s)
  - ≤ 500 m (baud rate: 38400 bit/s)

Figure 2-3 RS485 networking (SmartLogger)

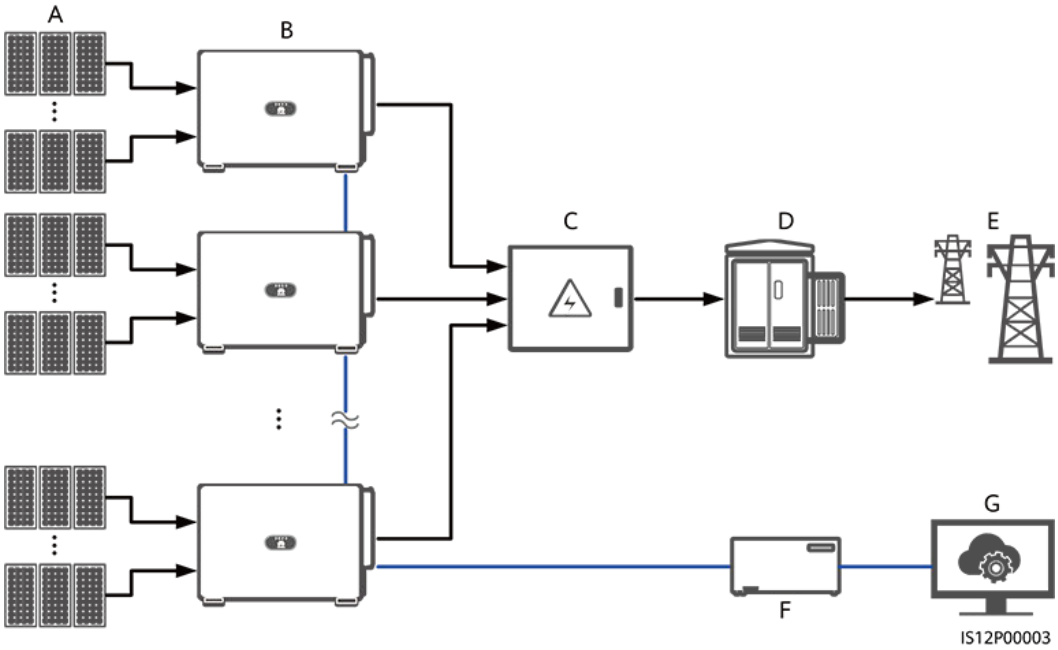

(A) PV string (B) SUN2000 (C) AC combiner box

Copyright © Huawei Technologies Co., Ltd.

(D) Transformer station	(E) Power grid	(F) SmartLogger
(G) Management system	-	-

Figure 2-4 RS485 networking (Smart Dongle)

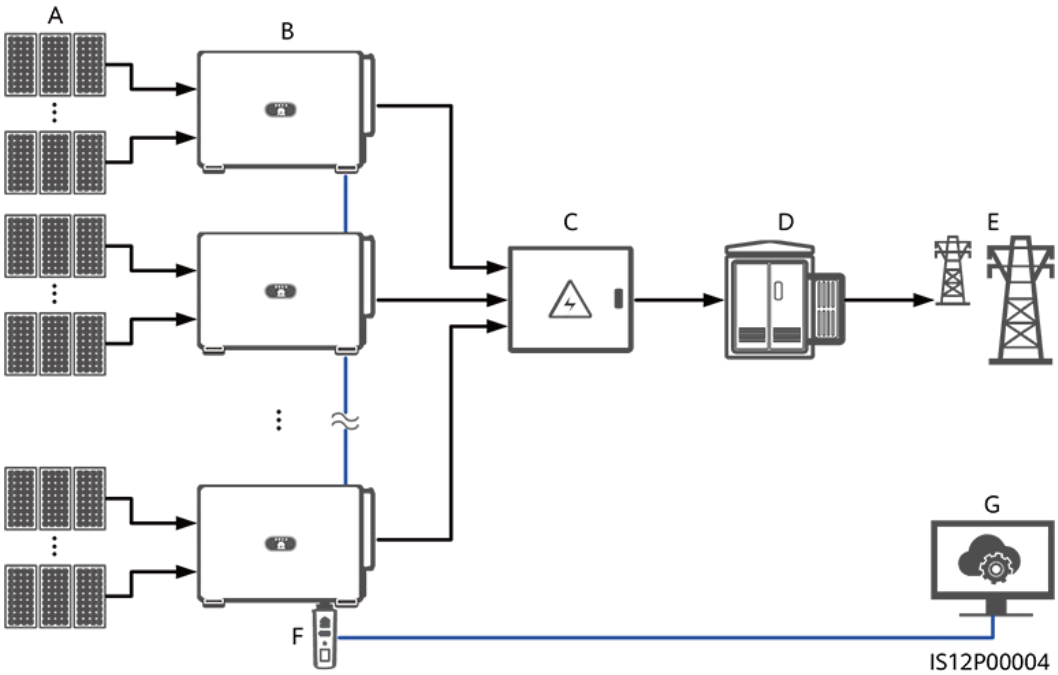

(A) PV string	(B) SUN2000	(C) AC combiner box
(D) Transformer station	(E) Power grid	(F) Smart Dongle
(G) Management system	-	-

2.3.1.2 MBUS Networking

WARNING

In MBUS communication scenarios, this equipment is not intended for use in residential environments and may not provide adequate protection to radio reception in such environments.

NOTICE

- The MBUS communication is applicable to medium-voltage grid connection scenarios or non-low-voltage public grid connection scenarios (industrial environment).
- In MBUS communication scenarios, this equipment must be connected to a dedicated step-up transformer or isolation transformer instead of connecting to low-voltage overhead power lines, and be physically separated from residential environments or radio receivers by distance greater than 30 m.

Copyright © Huawei Technologies Co., Ltd.

NOTICE

- A maximum of 80 SUN2000s can be cascaded to the SmartLogger, and a maximum of 10 SUN2000s can be cascaded to the Dongle.
- In the MBUS communication scenario, if the SmartLogger3000 is used, you are advised to use multi-core cables with the maximum communication distance of 1000 m. To use other types of AC power cables, contact local technical support.
- In the MBUS communication scenario, if the SmartLogger5000B or SmartMGC5000B is used, use multi-core cables with the maximum communication distance of 500 m. To use other types of AC power cables, contact local technical support.

Figure 2-5 MBUS networking (SmartLogger)

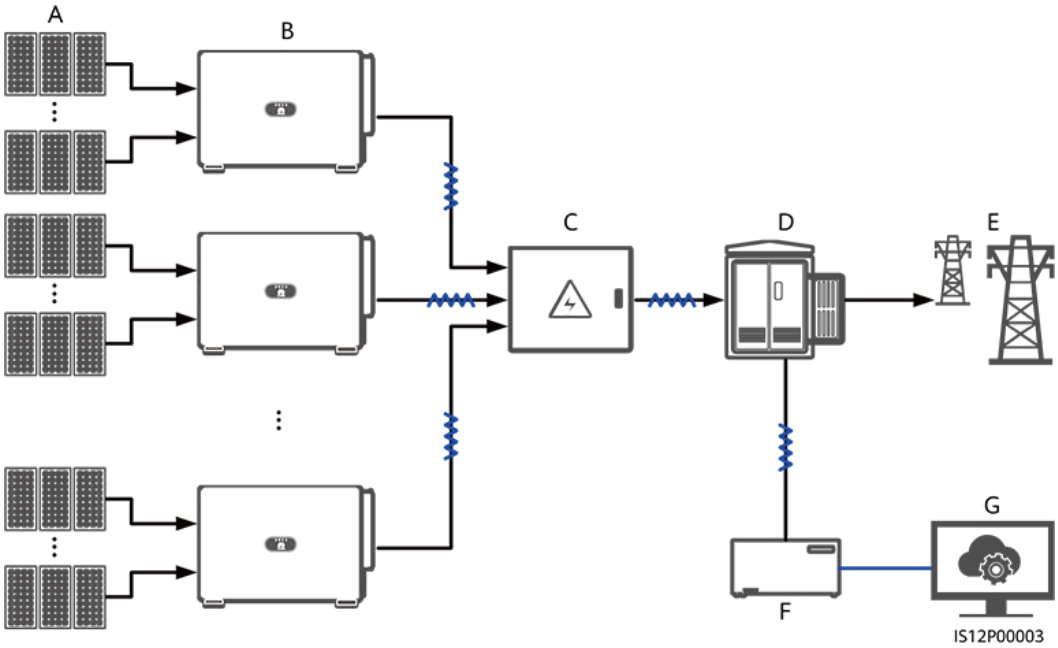

(A) PV string	(B) SUN2000	(C) AC combiner box
(D) Transformer station	(E) Power grid	(F) SmartLogger
(G) Management system	-	-

Copyright © Huawei Technologies Co., Ltd.

Figure 2-6 MBUS networking (Smart Dongle)

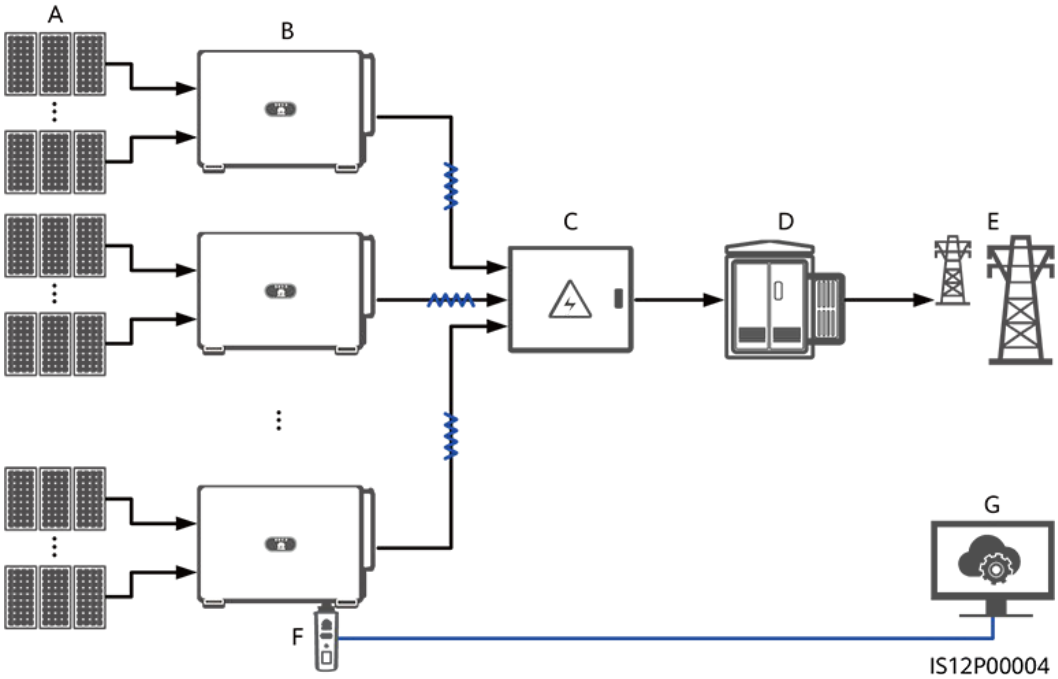

(A) PV string	(B) SUN2000	(C) AC combiner box
(D) Transformer station	(E) Power grid	(F) Smart Dongle
(G) Management system	-	-

2.3.2 Earthing Systems

The SUN2000 supports the TN-S, TN-C, TN-C-S, TT, and IT earthing systems.

 Copyright © Huawei Technologies Co., Ltd.

Figure 2-7 Earthing systems

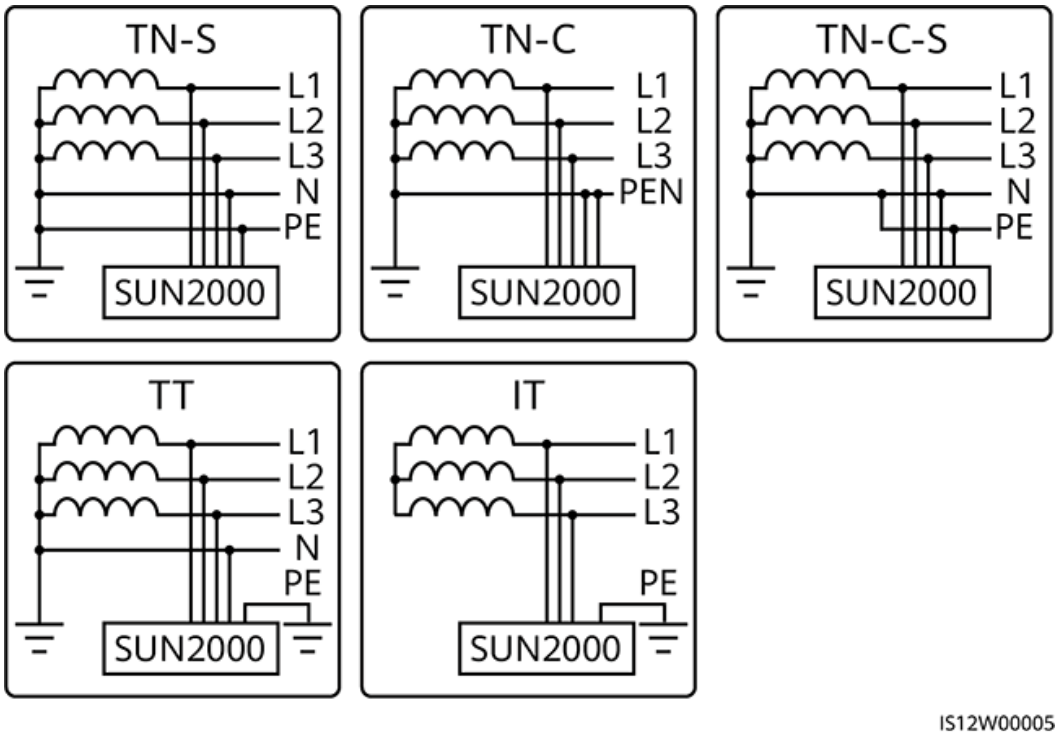

2.4 Label Description

Symbol	Name	Meaning
	Large current warning	Potential hazards exist after the inverter is powered on. Take protective measures when operating the inverter. Before powering on the inverter, ensure that it is grounded, as high touch current will occur after the inverter is powered on.
	High temperature hazard	Do not touch the inverter when it is running because its enclosure is hot.
	Electric shock hazard	Hazardous voltages exist when the inverter is working. Take protective measures during operations and maintenance.

Copyright © Huawei Technologies Co., Ltd.

Symbol	Name	Meaning
	Delayed discharge	• High voltage exists after the inverter is powered on. Only qualified and trained electrical technicians are allowed to perform operations on the inverter. • Residual voltage exists after the inverter is powered off. It takes 15 minutes for the inverter to discharge to a safe voltage.
	Refer to documentation	Reminds operators to refer to the documentation provided with the device. Losses caused by operations that do not comply with the requirements of site selection, storage, or mounting specified in the user manual are not covered under the warranty.
	Protective earthing	Indicates the position for connecting the protective earthing (PE) cable.
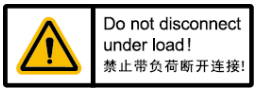	Operation warning	Do not remove the DC input connector when the inverter is running.
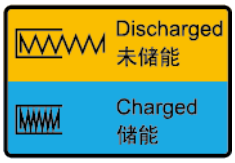	Switch operation warning	If the energy of the DC switch is discharged, it may fail to switch off automatically.
	Switch energy discharge warning	This position indicates that the energy of the DC switch is discharged. Do not set the DC switch to this position.

Copyright © Huawei Technologies Co., Ltd.

Symbol	Name	Meaning
	Fan operation warning	Do not touch the fan when the inverter is in operation to avoid injury.
	Fan replacement warning	Before replacing the fan, disconnect its power connector.
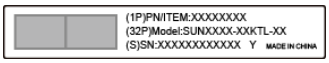	Inverter SN	Indicates the inverter serial number.
	Device weight	The inverter is heavy and must be carried by four persons or using a forklift.
	DC switch operation warning	After a DC switch is automatically turned off, do not directly reset or turn on the DC switch. Instead, follow the instructions in the section "Resetting and Turning On the DC Switch" in the user manual, or contact after-sales service personnel.

2.5 Product Appearance

Copyright © Huawei Technologies Co., Ltd.

2.5.1 Product Appearance

Front View

Figure 2-8 Front view

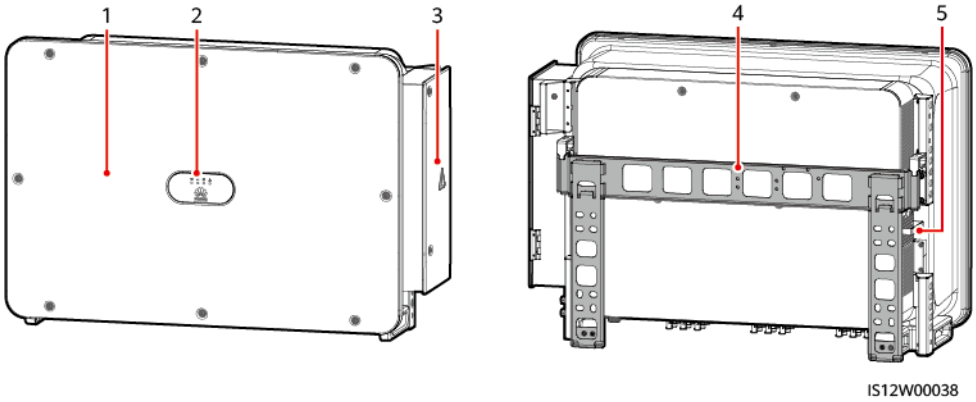

(1) Panel	(2) LED indicators
(3) Maintenance compartment door	(4) Mounting bracket
(5) External fan tray	-

Bottom View

Figure 2-9 Ports

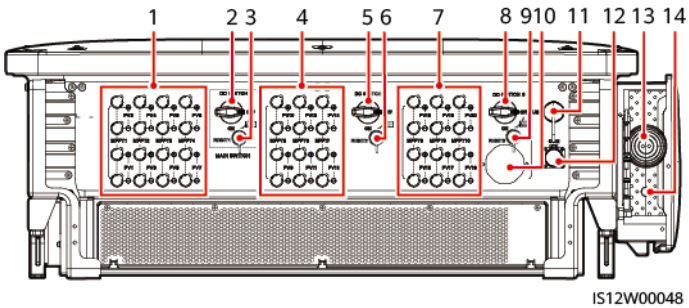

(1) DC input terminal group 1 (PV1–PV8, controlled by DC SWITCH 1)	(2) DC switch 1 (DC SWITCH 1)
(3) Reset button 1 (RESET 1)	(4) DC input terminal group 2 (PV9–PV14, controlled by DC SWITCH 2)
(5) DC switch 2 (DC SWITCH 2)	(6) Reset button 2 (RESET 2)
(7) DC input terminal group 3 (PV15–PV20, controlled by DC SWITCH 3)	(8) DC switch 3 (DC SWITCH 3)
(9) Reset button 3 (RESET 3)	(10) Ventilation valve
(11) USB port (USB)	(12) Communications port (COM)
(13) AC output cable hole	(14) Tracking system power cable hole

Copyright © Huawei Technologies Co., Ltd.

DC Switch Description

DANGER

- If all the DC switches are automatically turned off at the same time, the AC switch does not trip, and the indicators on the inverter display the following status, do not turn on the DC switches by yourself. Contact your vendor or technical support.
  1. LED1, LED2, and LED4 are steady red.
  2. LED1 and LED4 are steady red.
- If all the DC switches are automatically turned off at the same time, the AC switch does not trip, and the LED4 indicator on the inverter is steady red, do not turn on the DC switches by yourself. Perform operations according to the handling suggestions for alarm ID 2001.
- If all the DC switches are automatically turned off at the same time and the AC switch trips, contact your vendor or technical support. Do not turn on the AC switch.
- Before turning on a switch, ensure that all alarms have been cleared.

Table 2-2 DC switch description

Switch	Description	
DC SWITCH	**ON**	The DC switch is on and can be automatically turned off for protection.
		The DC switch is on but cannot be automatically turned off for protection.
	OFF	The DC switch is off.
RESET	• When the DC switch is automatically turned off for protection, the RESET button will be released. • If the RESET button is not pressed, the DC switch can only be turned to the marked position and cannot be set to the ON position.	

Copyright © Huawei Technologies Co., Ltd.

Dimensions

Figure 2-10 Dimensions

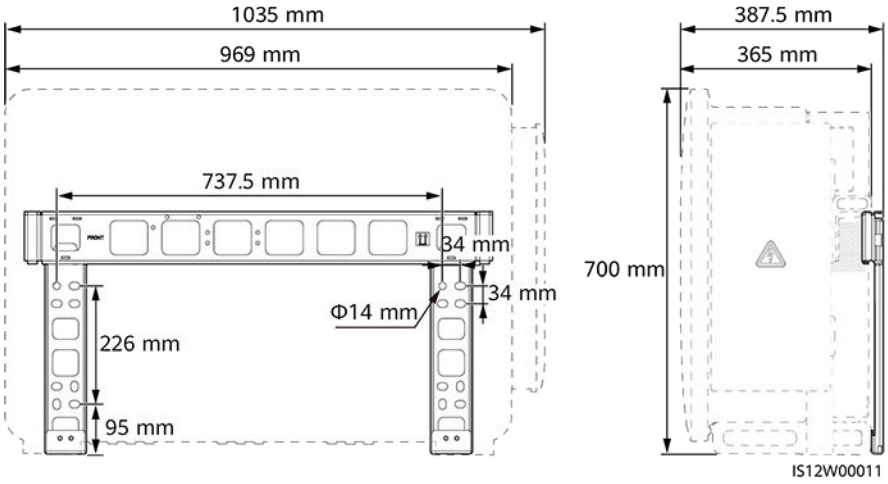

Wiring Area

Figure 2-11 Wiring ports

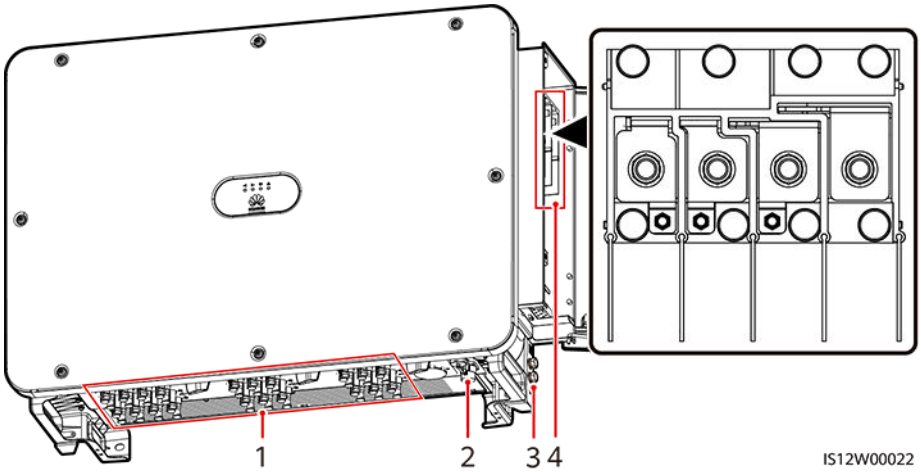

(1) DC input terminals

(2) RS485 port

(3) Ground point on the enclosure

(4) AC terminal block

2.5.2 Indicator Status

Figure 2-12 Indicators

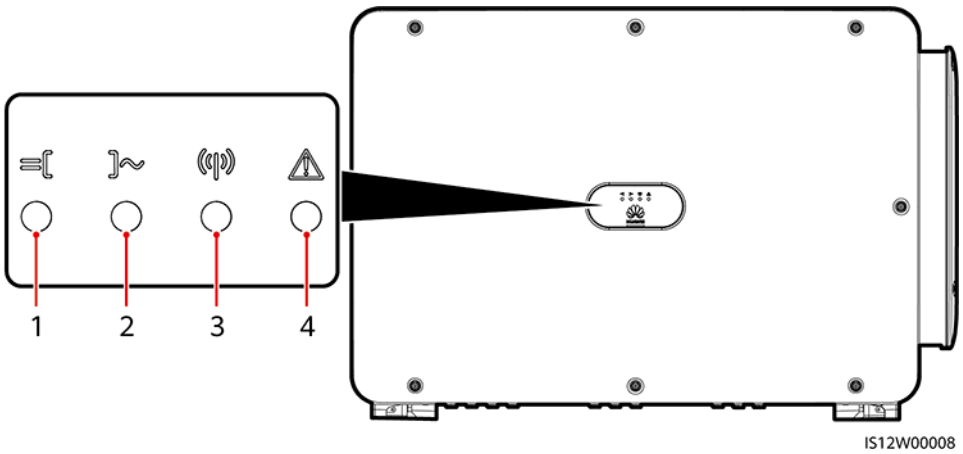

No.	Indicator	Status (Blinking Fast: On for 0.2s and Off for 0.2s; Blinking Slowly: On for 1s and Off for 1s)	Description
1	PV connection indicator	Steady green	At least one PV string is properly connected, and the DC input voltage of the corresponding MPPT circuit is at least 200 V.
		Blinking green fast	If the alarm/maintenance indicator is red, an environmental fault on the DC side of the inverter was generated.
		Off	The inverter is disconnected from all PV strings, or the DC input voltage of all MPPT circuits is less than 200 V.
		Steady red	If the alarm/maintenance indicator is red, an internal fault on the DC side of the inverter was generated.
2	Grid connection indicator	Steady green	The inverter is in grid-tied mode.
		Blinking green fast	If the alarm/maintenance indicator is red, an environmental fault on the AC side of the inverter was generated.
		Off	The inverter is not in grid-tied mode.
		Steady red	If the alarm/maintenance indicator is red, an internal fault on the AC side of the inverter was generated.

Copyright © Huawei Technologies Co., Ltd.

No.	Indicator	Status (Blinking Fast: On for 0.2s and Off for 0.2s; Blinking Slowly: On for 1s and Off for 1s)		Description
3	Communication indicator	Blinking green fast		The inverter receives communication data normally.
		Off		The inverter has not received communication data for 10 seconds.
4	Alarm/ Maintenance indicator	Alarm state	Steady red	A major alarm was generated. ● If the PV connection indicator or grid connection indicator is blinking green fast, rectify DC or AC environmental faults as instructed by the app. ● If neither the PV connection indicator nor the grid connection indicator is blinking green fast, replace components or the inverter as instructed by the app.
			Blinking red fast	A minor alarm was generated.
			Blinking red slowly	A warning alarm was generated.
		Local maintenance state	Steady green	The local maintenance is successful.
			Blinking green fast	The local maintenance failed.
			Blinking green slowly	The device is under local maintenance or shut down after receiving a command.

NOTE

- The PV connection indicator and the grid connection indicator preferentially indicate environmental faults.
- Local maintenance refers to operations performed after a USB data cable is inserted into the USB port of the inverter. For example, connect to the local app using a USB data cable.
- If alarms are generated during the local maintenance, the alarm/maintenance indicator shows the local maintenance state first. After the USB cable is removed, the indicator shows the alarm state.
- iOS mobile phones do not support connection to the app using a USB data cable. You are advised to use the SmartLogger or Dongle for O&M.

2.6 Working Principles

 Copyright © Huawei Technologies Co., Ltd.

2.6.1 Circuit Diagram

The SUN2000 receives inputs from 20 PV strings. The inputs are grouped into 10 MPPT circuits inside the SUN2000 to track the maximum power points of the PV strings. The DC power is then converted into three-phase AC power through an inverter circuit. Surge protection is supported on both the DC and AC sides.

Figure 2-13 Schematic diagram

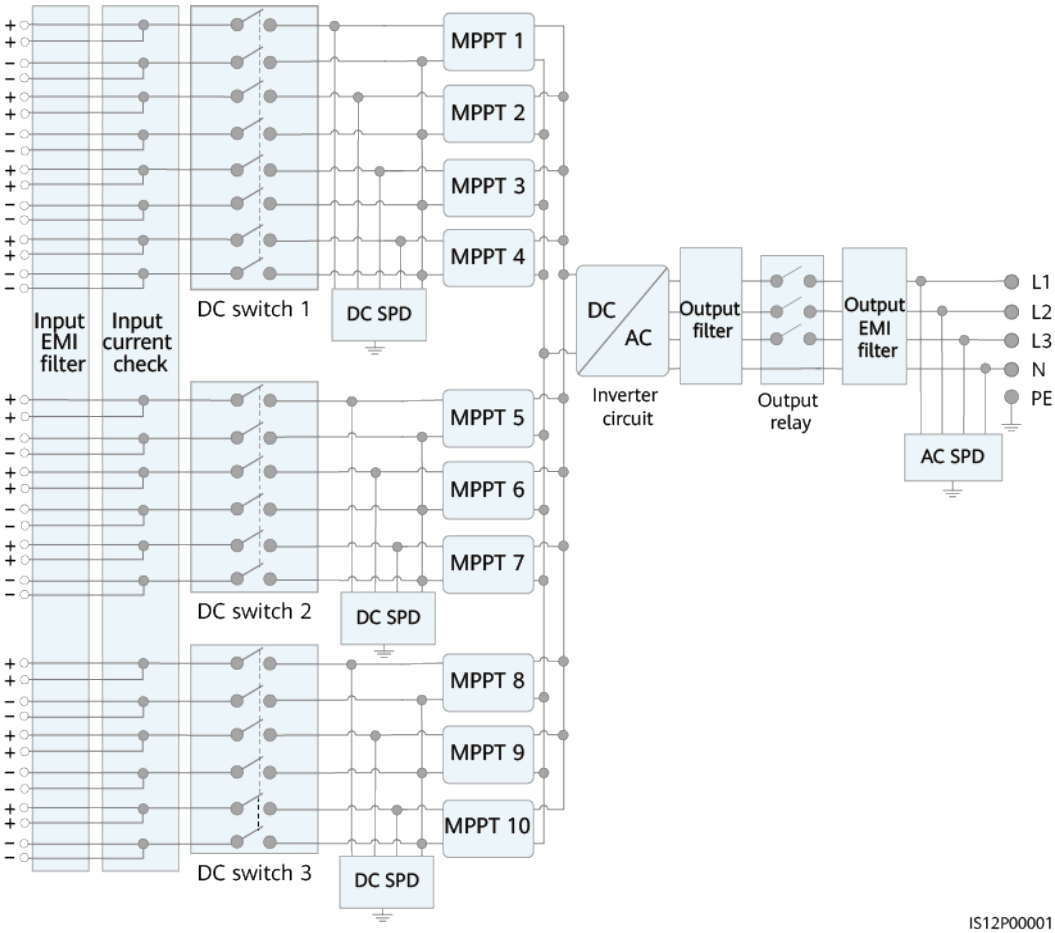

2.6.2 Working Modes

The SUN2000 can work in Standby, Operating, or Shutdown mode.

Figure 2-14 Working modes

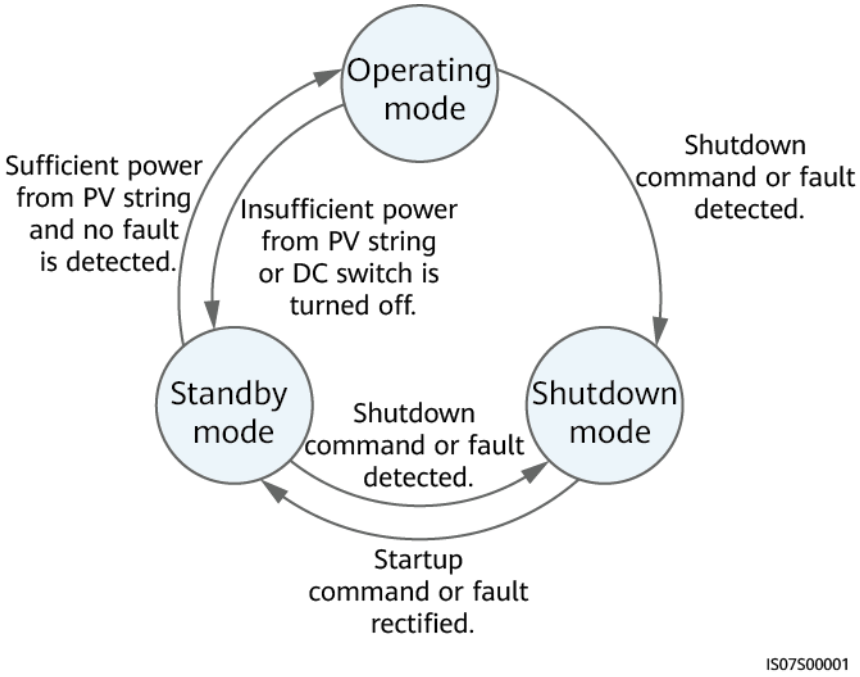

Table 2-3 Working mode description

Working Mode	Description
Standby	The SUN2000 enters Standby mode when the external environment does not meet the operating requirements. In Standby mode: ● The SUN2000 continuously performs status check and enters the Operating mode once the operating requirements are met. ● The SUN2000 enters Shutdown mode after detecting a shutdown command or a fault after startup.
Operating	In Operating mode: ● The SUN2000 converts DC power from PV strings into AC power and feeds the power to the power grid. ● The SUN2000 tracks the maximum power point to maximize the PV string output. ● If the SUN2000 detects a fault or a shutdown command, it enters the Shutdown mode. ● The SUN2000 enters Standby mode after detecting that the PV string output power is not suitable for connecting to the power grid for generating power.
Shutdown	● In Standby or Operating mode, the SUN2000 enters Shutdown mode after detecting a fault or shutdown command. ● In Shutdown mode, the SUN2000 enters Standby mode after detecting a startup command or that the fault is rectified.

 Copyright © Huawei Technologies Co., Ltd.

3 Inverter Storage

NOTICE

- Store devices according to the storage requirements. Device damage caused by unqualified storage conditions is not covered under the warranty.
- Do not store the devices without outer packaging.

The following requirements shall be met if inverters are not put into use immediately:

- Do not remove the outer packaging. Check the packaging regularly (recommended: once every three months). Replace any packaging that is damaged during storage.
- If an inverter is unpacked but will not be used immediately, put it back to the original packaging with the desiccant, and seal it with tape.
- Inverters must be stored in a clean and dry environment with appropriate temperature and humidity. The air must not contain corrosive or flammable gases.

Figure 3-1 Storage temperature and humidity

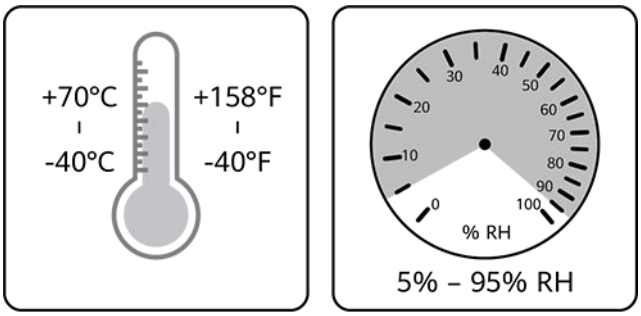

IS07W00011

- When temporarily storing inverters outdoors, do not stack them on a pallet. Take rainproof measures such as using tarpaulins to protect inverters from rain and water.
- Do not tilt a packing case or place it upside down.
- To avoid personal injury or device damage, stack inverters with caution to prevent them from falling over.

 Copyright © Huawei Technologies Co., Ltd.

Figure 3-2 Maximum number of stacking layers (In the figure, N indicates the maximum number of stacking layers.)

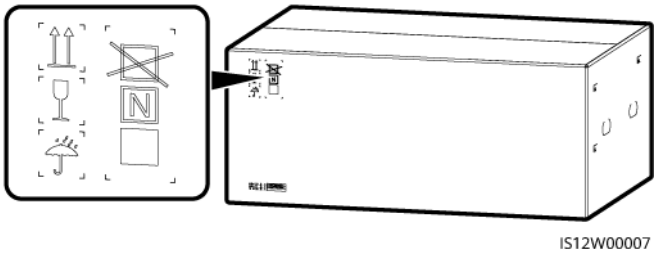

- Do not store inverters for more than two years. If inverters have been stored for two years or longer, they must be checked and tested by professionals before being put into use.
- If an inverter has not been running for six months or longer after being mounted, it may have failed and must be checked and tested by professionals before being put into operation.

4 Installation

4.1 Check Before Installation

Checking Outer Packing

Before unpacking the inverter, check the outer packing for damage, such as holes and cracks, and check the inverter model. If any damage is found or the inverter model is not what you requested, do not unpack the device and contact your dealer as soon as possible.

NOTE

You are advised to remove the SUN2000 packing materials within 24 hours before installing the product.

Checking Deliverables

NOTICE

- After placing the equipment in the installation position, unpack it with care to prevent scratches. Keep the equipment stable during unpacking.

After unpacking the inverter, check that the contents are intact and complete. If any item is missing or damaged, contact your dealer.

NOTE

For details about the quantity of deliverables, see the *Packing List* in the packing case.

Copyright © Huawei Technologies Co., Ltd.

4.2 Tools

Category	Tool			
Installation	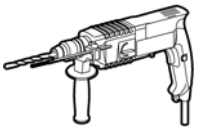 Hammer drill	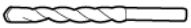 Drill bit (Φ14 mm and Φ16 mm)	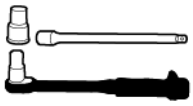 Insulated torque socket wrench (including an extension bar ≥ 50 mm)	 Phillips insulated torque screwdriver
	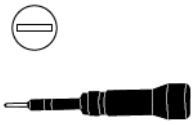 Flat-head insulated torque screwdriver	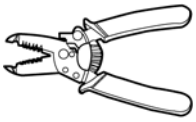 Wire stripper	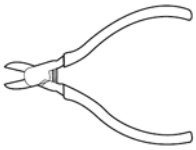 Diagonal pliers	 Rubber mallet
	 Utility knife	 Cable cutter	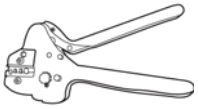 Crimping tool Model: H4TC0003 Manufacturer: AMPHENOL (for Amphenol Helios H4 terminals only)	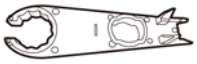 Open-end wrench Model: H4TW0001 Manufacturer: AMPHENOL (for Amphenol Helios H4 terminals only)

Copyright © Huawei Technologies Co., Ltd.

Category	Tool			
	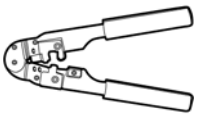 RJ45 crimping tool	Vacuum cleaner	Multimeter (DC voltage measurement range ≥ 1100 V DC)	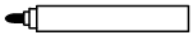 Marker
	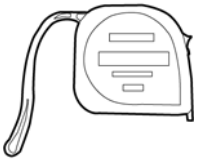 Steel measuring tape	Digital or bubble level	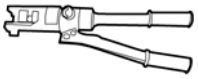 Hydraulic pliers	Heat shrink tubing
	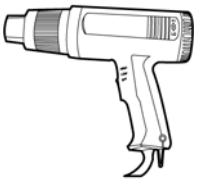 Heat gun	Cable tie	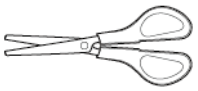 Scissors	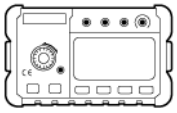 Insulation resistance tester (output voltage > 1500 V)
	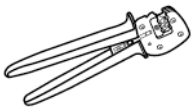 Crimping tool Model: PV-CZM-22100 Manufacturer: Staubli (for Staubli MC4 terminals only)	Open-end wrench Model: PV-MS-HZ Manufacturer: Staubli (for Staubli MC4 terminals only)	-	-

 Copyright © Huawei Technologies Co., Ltd.

Category	Tool			
Personal protective equipment (PPE)	Insulated gloves	Safety goggles	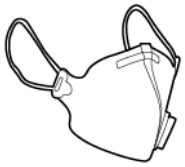 Dust mask	Insulated shoes
	Safety helmet	Reflective vest	Protective gloves	-

4.3 Determining the Installation Position

Installation Environment Requirements

- Keep the inverter out of reach of children.
- Do not install the inverter in working or living areas to avoid personal injury or property loss caused by accidental contact by non-professionals or other reasons during device operation.
- Do not install the inverter in noise-sensitive areas (such as residential areas, office areas, and schools) to avoid complaints. If the preceding areas are unavoidable, the distance between the installation position and noise-sensitive areas must be greater than 40 m. Alternatively, use other low-noise models.
- If the device is installed in public places (such as parking lots, stations, and factories) other than working and living areas, install a protective net outside the device and set up a safety warning sign to isolate the device. This is to avoid personal injury or property loss caused by accidental contact by non-professionals or other reasons during device operation.
- If the equipment is installed in a place with abundant vegetation, in addition to routine weeding, harden the ground underneath the equipment using cement or gravel (the area shall be greater than or equal to 3 m x 2.5 m).
- Do not install the equipment in an area with strong vibration, noise, or electromagnetic interference. The equipment shall be installed in an environment with a magnetic field strength less than 4 Gauss. If the magnetic field strength is greater than or equal to 4 Gauss, the equipment may fail to work properly. If the magnetic field strength is high, for example, in a smeltery, you are advised to use a gauss meter to measure the magnetic field strength of the equipment installation position when the smelting equipment is running normally.

 Copyright © Huawei Technologies Co., Ltd.

- Do not install the inverter in areas containing flammable materials (such as sulfur, phosphorus, liquefied petroleum gas, marsh gas, flour, and cotton) to avoid personal injury or property loss caused by fire or other reasons.
- Do not install the inverter in areas containing explosives (such as blasting agents, display shells, fireworks, and firecrackers) to avoid personal injury or property loss caused by explosion or other reasons.
- Do not install the inverter in areas with corrosive substances (such as sulfuric acid, hydrochloric acid, nitric acid, hydrogen sulfide, and chlorine) to avoid inverter failure caused by corrosion, which is not covered under the warranty.
- Avoid installing inverters in easily accessible locations, as they operate at a high voltage and their enclosures and heat sinks become hot during use.
- The inverter provides self-protection in high-temperature environments. Its energy yield may decrease as the ambient temperature increases. Ensure that the following installation requirements are met:
  - Install the inverter in a well-ventilated environment to ensure good heat dissipation.
  - If the inverter is installed in an enclosed environment, the heat dissipation equipment or ventilation equipment shall be installed. The indoor ambient temperature must not be higher than the outdoor ambient temperature.
  - You are advised to install the device in a sheltered place or install an awning over it to avoid direct sunlight.
  - Reserve sufficient clearance around the inverter for installation and heat dissipation.
- Do not install the equipment in salt-affected areas because it may be corroded. If the equipment has to be installed in a salt-affected area, consult the Company. A salt-affected area refers to the region within 500 m of the coast or prone to sea breeze. Regions prone to sea breeze vary with weather conditions (such as typhoons and monsoons) or terrains (such as dams and hills).

CAUTION

The SUN2000-75KTL-M1 shall be installed in compliance with the technical standards for PV electrical installation (NBR 16690) and the technical standards for PV system fire risk management (IEC 63226).

Mounting Structure Requirements

- The mounting structure for the inverter must be fireproof. Do not install the inverter on flammable building materials to avoid personal injury or property loss caused by fire or other reasons.
- Ensure that the installation surface is solid enough to bear the weight of the inverter to avoid personal injury or property loss caused by the collapse of the mounting structure or other reasons.
- In residential areas, do not install the inverter on plaster board walls or walls made of similar materials with a weak sound insulation performance because the noise generated by the inverter may interfere with residents.

 Copyright © Huawei Technologies Co., Ltd.

Figure 4-1 Mounting structure

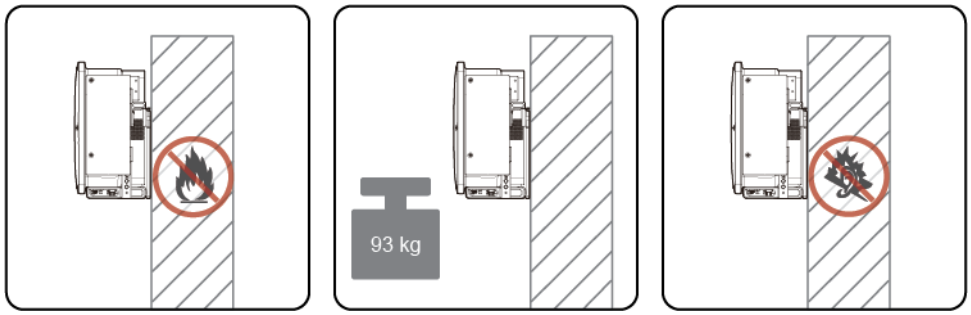

Installation Angle Requirements

The inverter can be support-mounted or wall-mounted. The installation angle requirements are as follows:

- Install the inverter vertically or at a maximum back tilt of 75 degrees to facilitate heat dissipation.
- Do not install the inverter at forward tilted, excessive back tilted, side tilted, horizontal, or upside down positions.

Figure 4-2 Installation angle

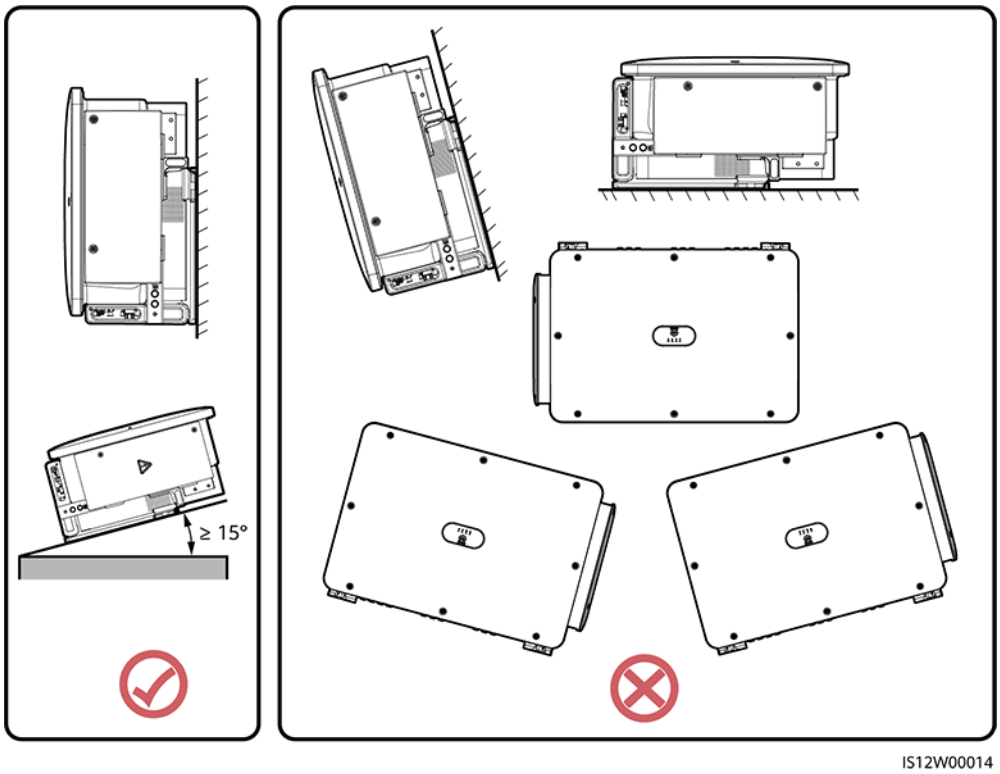

Installation Clearance Requirements

Reserve sufficient clearance around the inverter for installation and heat dissipation (see **Figure 4-3**). The inverter provides self-protection in high-temperature environments. The impact of environment changes on the clearance for heat dissipation needs be considered during design. The clearance around the

 Copyright © Huawei Technologies Co., Ltd.

inverter may become insufficient for reasons such as rotation axis change. The energy yield of the inverter may decrease if heat cannot be effectively dissipated.

Figure 4-3 Clearance

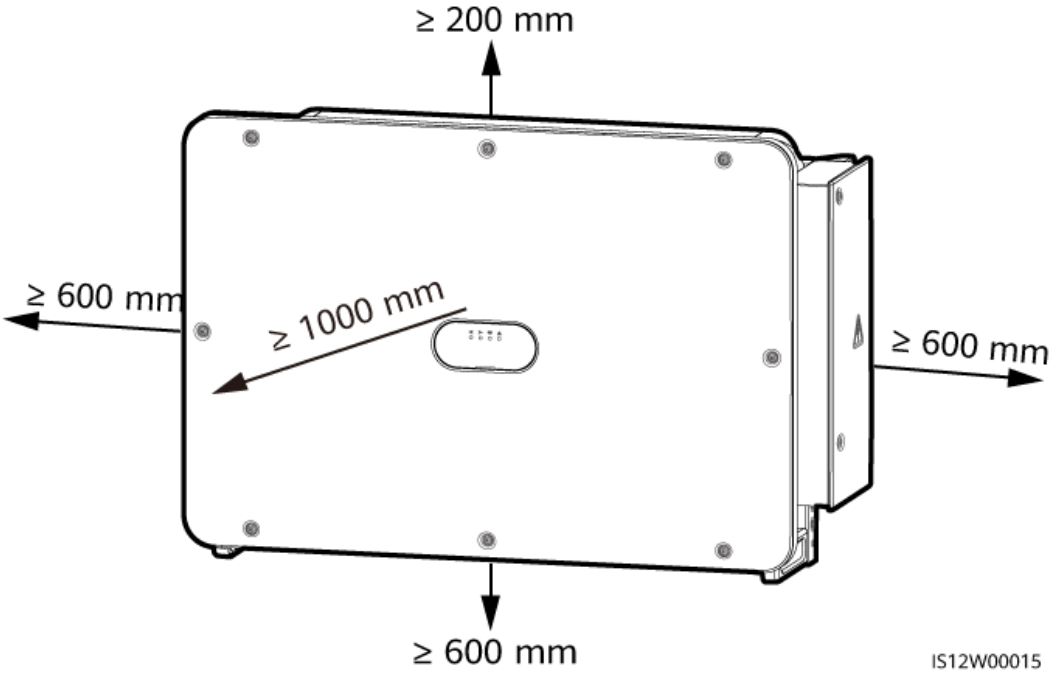

NOTE

For ease of the inverter installation on the mounting bracket, cable connecting at the bottom, and future maintenance, it is recommended that the clearance from the bottom be between 600 mm and 730 mm. For further questions regarding clearance, consult local technical support engineers.

When installing multiple inverters, install them in horizontal mode if sufficient space is available and install them in triangle mode if no sufficient space is available. Stacked installation is not recommended.

Figure 4-4 Horizontal installation mode (recommended)

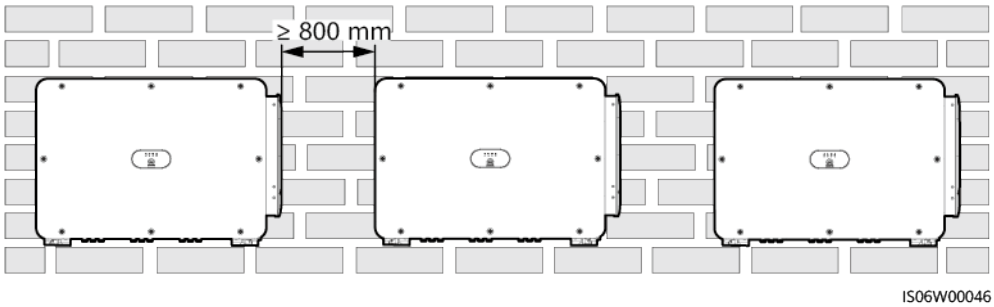

Figure 4-5 Triangle installation mode (recommended)

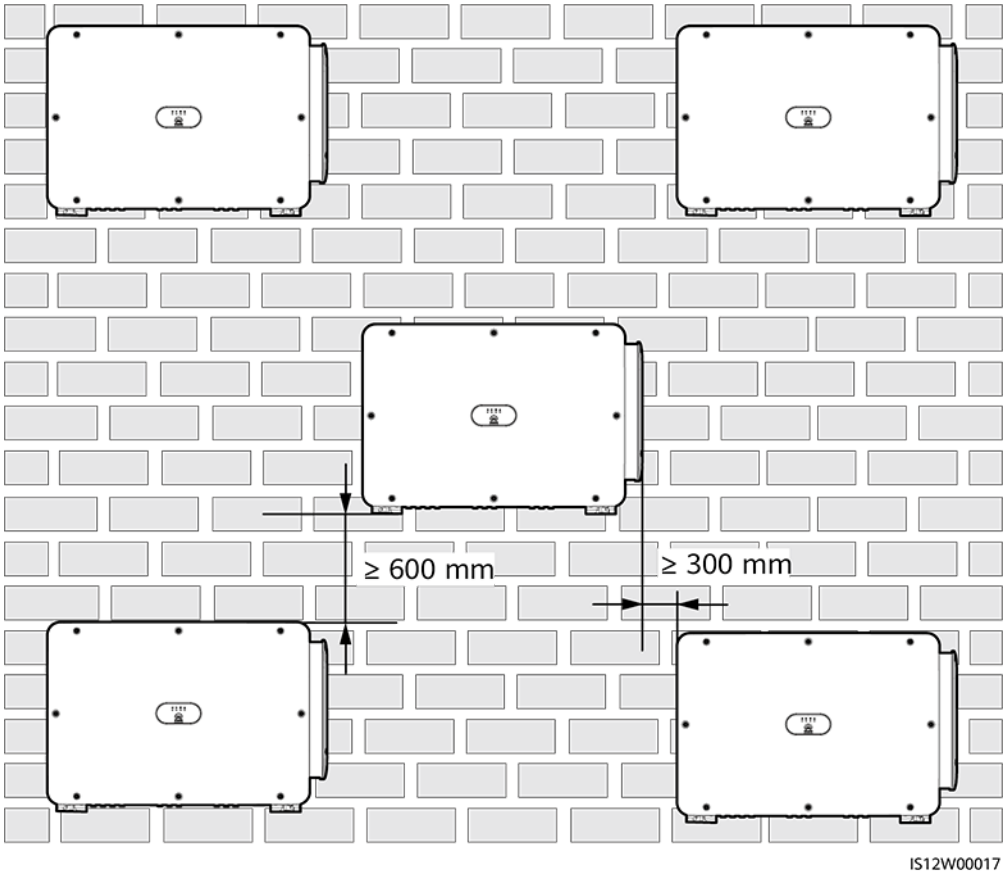

Figure 4-6 Stacked installation mode (not recommended)

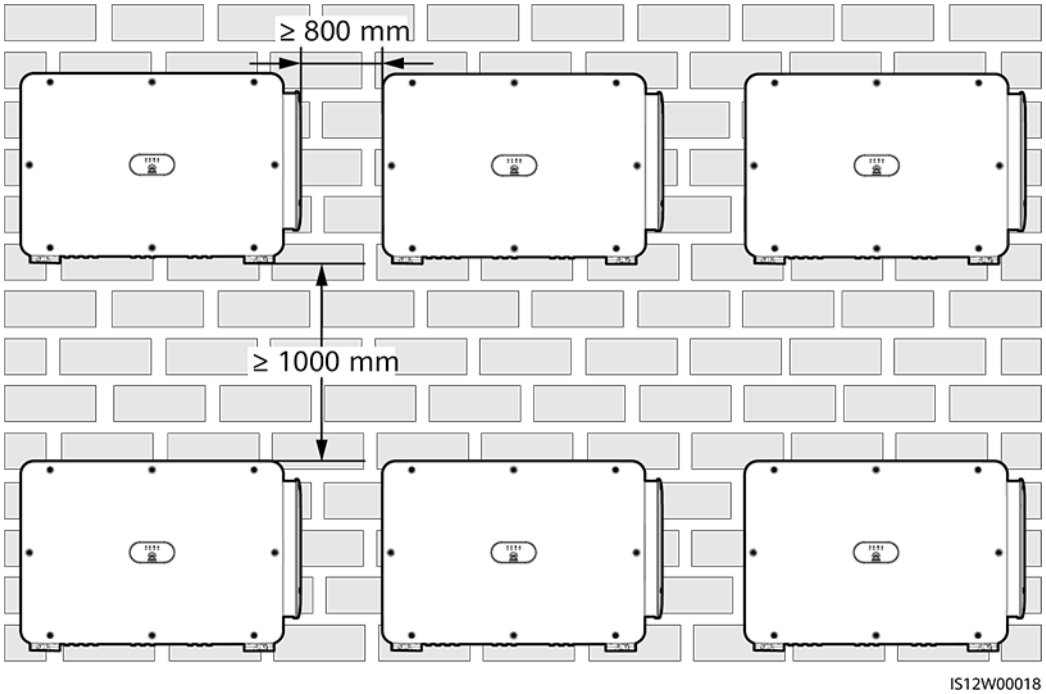

Copyright © Huawei Technologies Co., Ltd.

4.4 Installing the Mounting Bracket

Before installing the mounting bracket, remove the torx key and keep it for later use.

Figure 4-7 Position for binding the torx key

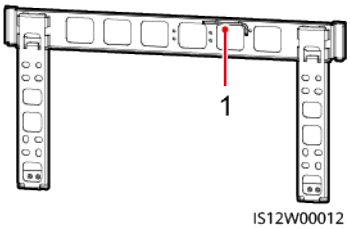

(1) Torx key

The mounting bracket of the SUN2000 has four groups of tapped holes, each group containing four tapped holes. Mark any hole in each group based on site requirements and mark four holes in total. The two round holes are recommended.

Figure 4-8 Hole dimensions

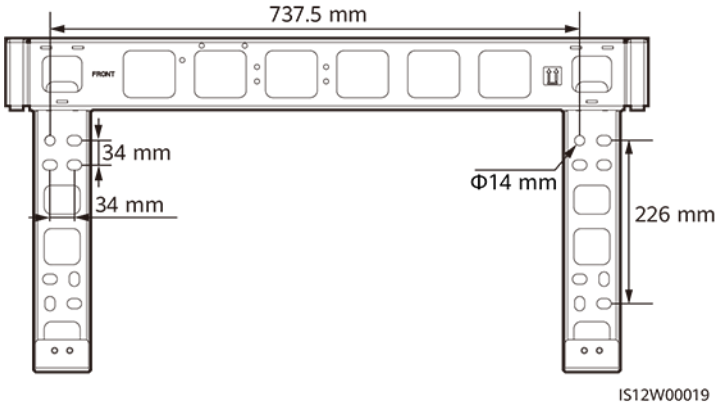

4.4.1 Support Mounting

Prerequisites

M12x40 bolt assemblies are delivered with the mounting bracket. If the length does not meet the installation requirements, the customer shall prepare M12 bolt assemblies and install them together with the M12 nuts delivered with the product.

Procedure

Step 1 Determine the positions for drilling holes using the mounting bracket. Level the positions of mounting holes using a digital or bubble level, and mark the positions with a marker.

 Copyright © Huawei Technologies Co., Ltd.

Step 2 Drill holes using a hammer drill. You are advised to take antirust measures on the hole positions.

Step 3 Secure the mounting bracket.

Figure 4-9 Installing the mounting bracket

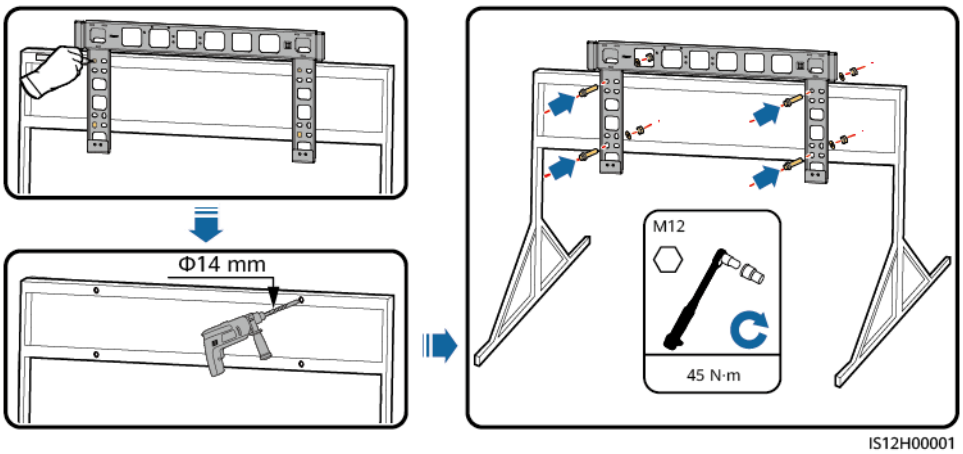

----End

4.4.2 Wall Mounting

Prerequisites

You have prepared expansion bolts. M12x60 stainless steel expansion bolts are recommended.

Procedure

Step 1 Determine the positions for drilling holes using the mounting bracket. Level the positions of mounting holes using a digital or bubble level, and mark the positions with a marker.

Step 2 Drill holes using a hammer drill and install expansion bolts.

WARNING

Avoid drilling holes into the water pipes and power cables buried in the wall.

Copyright © Huawei Technologies Co., Ltd.

NOTICE

- To avoid inhaling dust and to prevent dust from falling into your eyes, wear safety goggles and a dust mask when drilling holes.
- Use a vacuum cleaner to clean up dust in and around the holes, and measure the spacing. If the holes are inaccurately positioned, drill the holes again in correct positions.
- After removing the bolt, spring washer, and flat washer, level the top of the expansion sleeve with the concrete wall so that the sleeve does not protrude from the wall. Otherwise, the mounting bracket will not be evenly installed on the concrete wall.

Step 3 Secure the mounting bracket.

Figure 4-10 Installing the mounting bracket

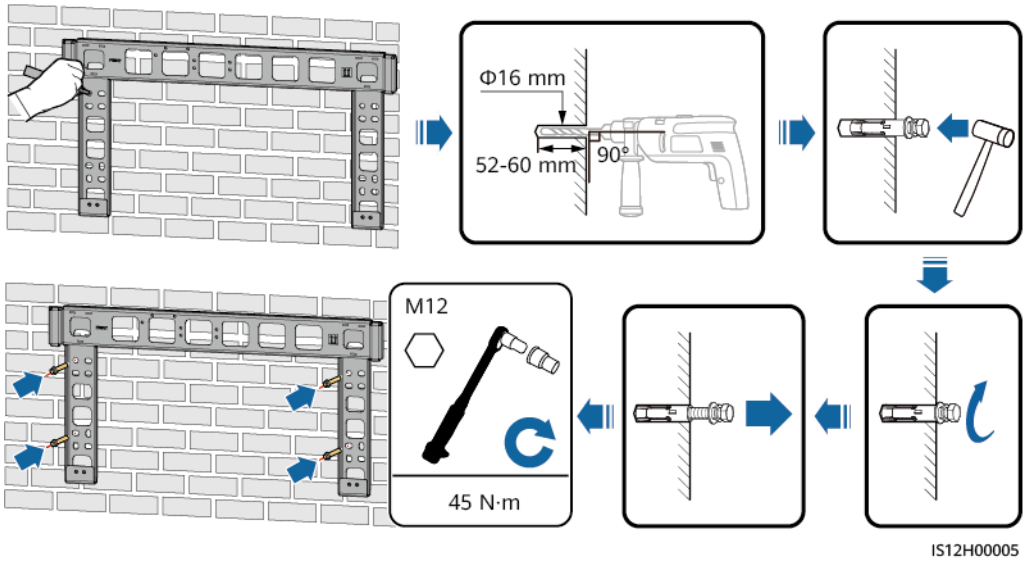

----End

Copyright © Huawei Technologies Co., Ltd.

4.5 Installing the Inverter

Context

NOTICE

- Move the inverter with care to prevent device damage and personal injury.
- Ensure that the inverter is moved by multiple persons or using tools such as a forklift.
- The connectors and terminals at the bottom of the inverter must not bear any weight. Ensure that they do not come into direct contact with the ground or other supports.
- When you need to temporally place the inverter on the ground, use foam, cardboard, or other protection material to prevent damage to its enclosure.
- Use lifting handles to facilitate installation, which are optional and delivered separately. Ensure that the lifting handles are securely installed. After the installation is complete, remove the lifting handles and keep them properly.
- Secure the lifting handles (with the steel washers of the lifting handles closely fitted to the device).
- If the stud of a lifting handle is bent, replace the lifting handle in time.
- To avoid damage to the inverter, do not lift or hoist it with an improper hold as shown in **Figure 4-12**.

Figure 4-11 Positions for installing the lifting handles

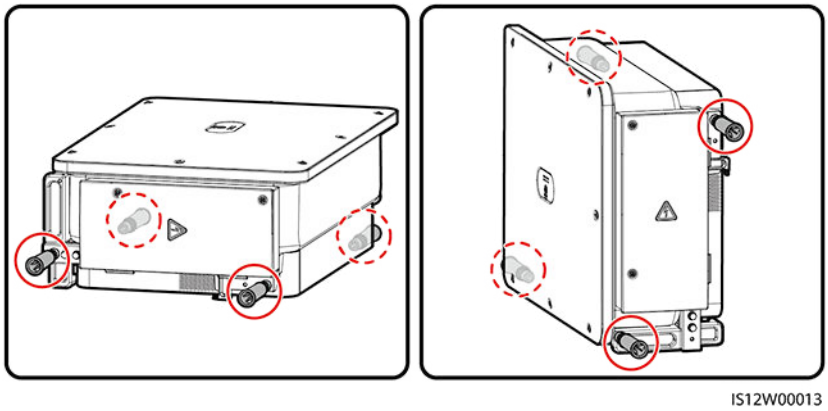

(A) Transportation scenario (B) Installation scenario

 Copyright © Huawei Technologies Co., Ltd.

Figure 4-12 Lifting positions

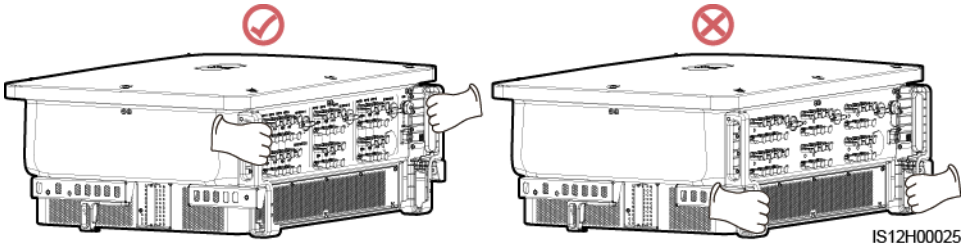

Procedure

Step 1 Take out the inverter from the packing case and move it to the installation position.

Figure 4-13 Taking out the inverter

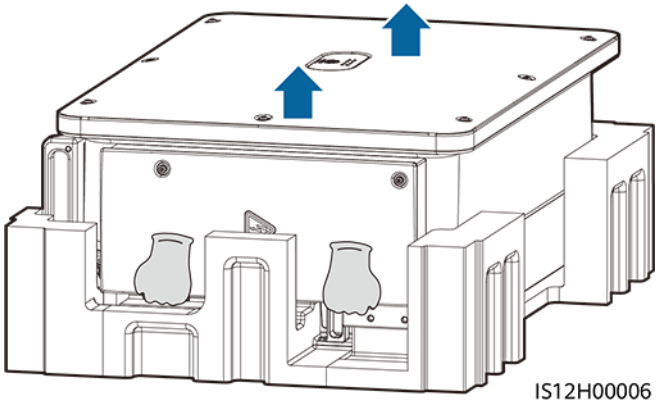

Step 2 Lift the inverter and keep it upright.

Figure 4-14 Lifting the inverter and keeping it upright

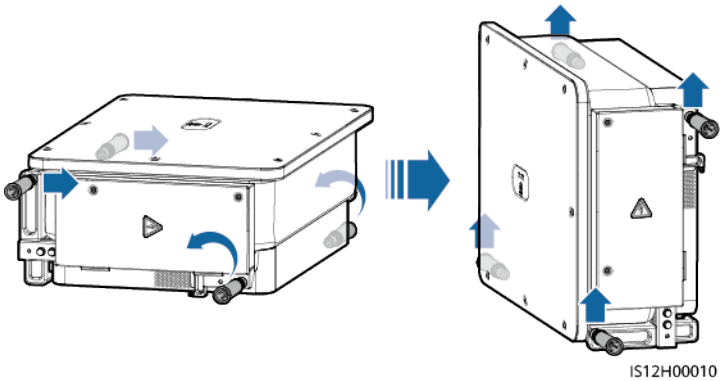

Step 3 If the installation position is high and a crane is required, run a sling (strong enough to bear the weight of the inverter) through the two lifting eyes to hoist the inverter.

NOTICE

Hoist the inverter with care to protect it from colliding with the wall or other objects.

 Copyright © Huawei Technologies Co., Ltd.

Figure 4-15 Hoisting the inverter

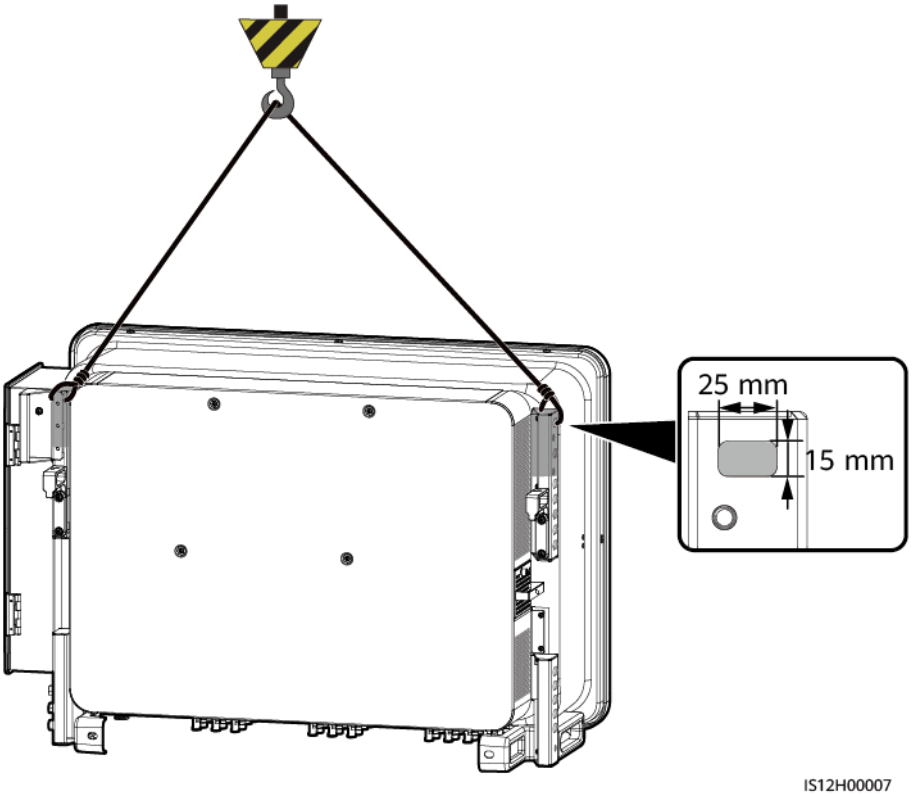

Step 4 Install the inverter on the mounting bracket and align the inverter enclosure with the mounting bracket.

Figure 4-16 Mounting the inverter

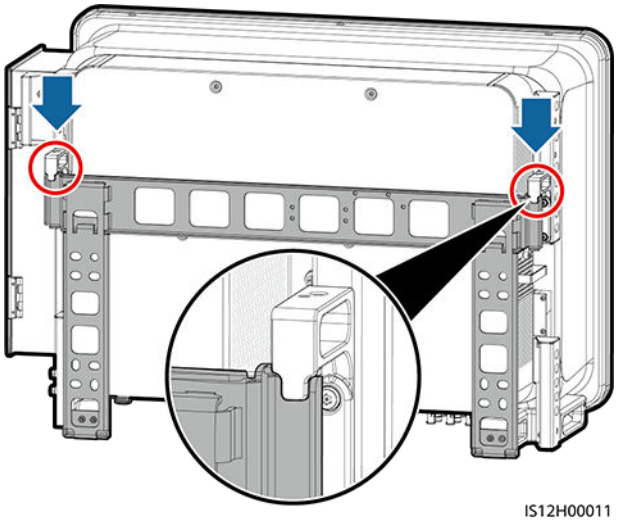

Step 5 Secure the inverter.

 Copyright © Huawei Technologies Co., Ltd.

Figure 4-17 Tightening security torx screws

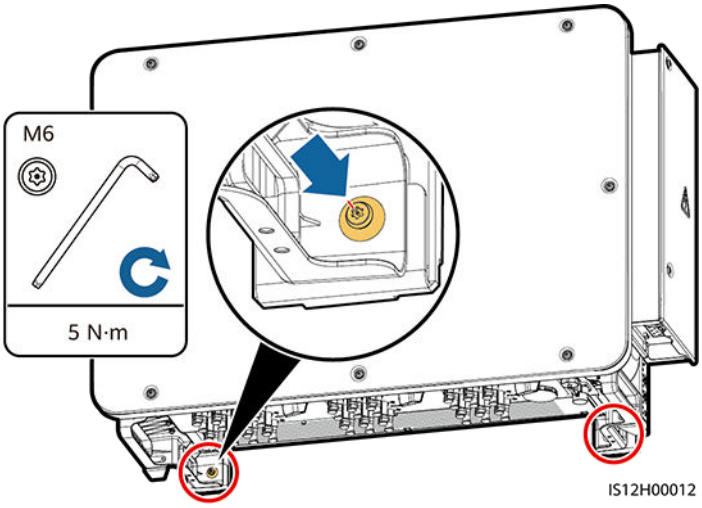

----End

5 Electrical Connections

5.1 Precautions

DANGER

- When exposed to sunlight, the PV arrays supply DC voltage to the inverter. Before connecting cables, ensure that each **DC SWITCH** on the inverter is set to **OFF**. Otherwise, the high voltage of the inverter may result in electric shocks.
- The site must be equipped with qualified fire fighting facilities, such as fire sand and carbon dioxide fire extinguishers.
- Wear personal protective equipment and use dedicated insulated tools to avoid electric shocks or short circuits.

WARNING

- Device damage caused by incorrect cable connections is not covered by the product warranty.
- Only professional electrical technicians are allowed to perform electrical connection operations.
- Operation personnel must wear PPE when connecting cables.
- Before connecting cables to ports, leave enough slack to reduce the tension on the cables and prevent poor cable connections.

CAUTION

- Stay away from the equipment when preparing cables to prevent cable scraps from entering the equipment. Cable scraps may cause sparks and result in personal injury and equipment damage.

 Copyright © Huawei Technologies Co., Ltd.

NOTE

The cable colors shown in the electrical connection diagrams provided in this section are for reference only. Select cables in accordance with local cable specifications (green-and-yellow cables are only used for protective earthing).

5.2 Preparing Cables

Figure 5-1 Inverter cable connections (configure the components in the dotted box as required)

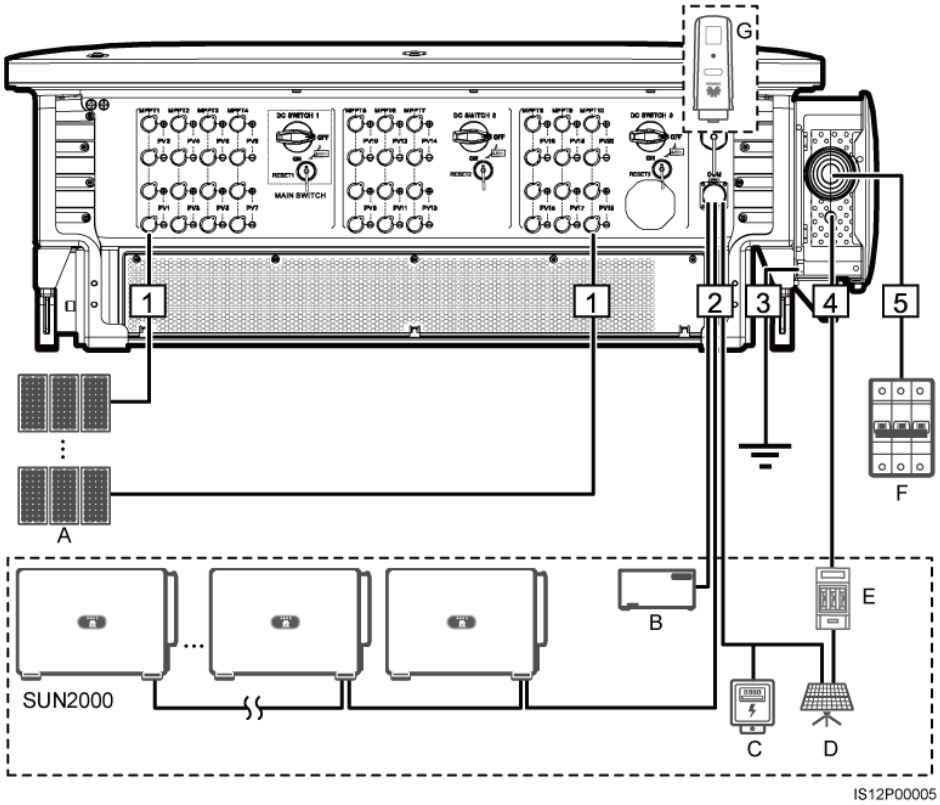

Table 5-1 Component description

No.	Component	Description	Source
A	PV string	• A PV string consists of PV modules connected in series. • The inverter supports 20 PV string inputs.	Prepared by the customer
B	SmartLogger	The SUN2000 communicates with the management system through the SmartLogger. Option: SmartLogger3000, SmartLogger5000B, or SmartMGC5000B	Purchased from the Company

Copyright © Huawei Technologies Co., Ltd.

No.	Component	Description	Source
C	Power meter[1]	Implements power control at the grid connection point in low voltage scenarios using a power meter. Recommended power meter models: DTSU666-HW, YDS60-80, DHSU1079-ZT, and DTSU71C	Purchased from the Company
D	Tracking system	The angle of trackers can be adjusted.	Prepared by the customer
E	Fuse/Circuit breaker	The tracking system should be equipped with an overcurrent protection device or component. The power cable between the device or component and the wiring terminal should be shorter than or equal to 2.5 m. A fuse or a circuit breaker is recommended. ● Installed between the SUN2000 and tracking control box ● Fuse specifications: rated voltage ≥ 500 V; rated current: 16 A; protection: gG ● Circuit breaker specifications: rated voltage ≥ 500 V; rated current: 16 A; tripping: C	Prepared by the customer
F	AC switch	To ensure that the inverter can be safely disconnected from the power grid when an exception occurs, connect an AC switch to the AC side of the inverter. Select an appropriate AC switch in accordance with local industry standards and regulations. ● Installed in the AC combiner box ● Recommended: a three-phase AC circuit breaker with a rated voltage greater than or equal to 500 V AC and a rated current of 250 A	Prepared by the customer
G	Smart Dongle	The SUN2000 communicates with the management system through the Smart Dongle.	Purchased from the Company
Note [1]: For details about how to operate the power meter, see **DTSU666-HW Smart Power Sensor Quick Guide**, **YDS60-80 Smart Power Sensor Quick Guide**, **DHSU1079-ZT Smart Power Sensor Quick Guide**, or **DTSU71C Smart Power Sensor Quick Guide**.			

Copyright © Huawei Technologies Co., Ltd.

NOTICE

The inverter has an internal residual current monitoring unit (RCMU). Its external AC switch should be a three-phase circuit breaker or any other AC load circuit breaker to safely disconnect the inverter from the power grid.

NOTE

- Select cables in compliance with local cable standards.
- The factors to be considered in cable selection include the rated current, cable type, routing mode, ambient temperature, and maximum acceptable line loss.
- If MBUS is used for communication, you are advised to use multi-core cables with the maximum communication distance of 1000 m. To use other types of AC power cables, contact local technical support.

Table 5-2 Cable description (S indicates the conductor cross-sectional area of the AC cable, and S_p indicates the conductor cross-sectional area of the PE cable)

No.	Cable	Type	Conductor Cross-Sectional Area	Outer Diameter	Source
1	DC input power cable	PV cable that meets the 1100 V standard	4–6 mm^2	5.5–9 mm	Prepared by the customer
2	RS485 communications cable	Outdoor shielded twisted pair cable that meets the local standard	0.25–1 mm^2	• One or two communications cables: 4–11 mm • Three communications cables: 4–8 mm	Prepared by the customer
3	PE cable[1]	Single-core outdoor copper cable and M10 OT/DT terminal	$S_p \geq S/2$	-	Prepared by the customer
4	Tracking system power cable	Three-core outdoor copper cable with dual-layer protection	10 mm^2	15–18 mm	Prepared by the customer

Copyright © Huawei Technologies Co., Ltd.

No.	Cable	Type	Conductor Cross-Sectional Area	Outer Diameter	Source
5	AC output power cable (multi-core)	• If you connect a PE cable to the ground point on the enclosure and no neutral wire is used, you are advised to use a three-core (L1, L2, and L3) outdoor cable and M12 OT/DT terminals (L1, L2, and L3). • If you connect a PE cable to the ground point in the maintenance compartment and no neutral wire is used, you are advised to use a four-core (L1, L2, L3, and PE) outdoor cable, M12 OT/DT terminals (L1, L2, and L3), and M10 OT/DT terminals (PE). • If you connect a PE cable to the ground point on the enclosure and a neutral wire is used, you are advised to use a four-core (L1, L2, L3, and N) outdoor cable and M12 OT/DT terminals (L1, L2, L3, and N). • If you connect a PE cable to the ground point in the maintenance compartment and a neutral wire is used, you are advised to use a five-core (L1, L2, L3, N, and PE) outdoor cable, M12 OT/DT terminals (L1, L2, L3, and N), and M10 OT/DT terminals (PE).	• Copper cable: – S: 70–240 mm^2 – $S_p \geq S/2$ • Aluminum alloy cable or copper-clad aluminum cable: – S: 95–240 mm^2 – $S_p \geq S/2$	24–66 mm	Prepared by the customer

Copyright © Huawei Technologies Co., Ltd.

No.	Cable	Type	Conductor Cross-Sectional Area	Outer Diameter	Source
	AC output power cable (single-core)	(Recommended) Single-core outdoor cable and M12 OT/DT terminal	• Copper cable: S: 70–240 mm^2 • Aluminum alloy cable or copper-clad aluminum cable: S: 95–240 mm^2	14–32 mm	Prepared by the customer
Note [1]: The S_p value is valid only if the conductors of the PE cable and AC output power cable use the same material. If the materials are different, ensure that the conductor cross-sectional area of the PE cable produces a conductance equivalent to that specified in this table. The specifications of the PE cable are subject to this table or calculated according to IEC 60364-5-54.					

5.3 Connecting a PE Cable

Context

NOTICE

- Proper grounding is helpful for resisting the impact of surge voltage and improving the electromagnetic interference (EMI) performance. Before connecting the AC power cable, DC power cables, and communications cable, connect the PE cable to the PE point.
- You are advised to connect the PE cable to the PE point on the enclosure. The ground point in the maintenance compartment is used for connecting to the PE wire of a multi-core AC power cable.
- It is recommended that the inverter be connected to a nearby PE point. Connect the PE points of all inverters in the same array to ensure equipotential connections to PE cables.

Procedure

Step 1 Connect the PE cable to the PE point.

Copyright © Huawei Technologies Co., Ltd.

Figure 5-2 Connecting a PE cable to the PE point (on the enclosure)

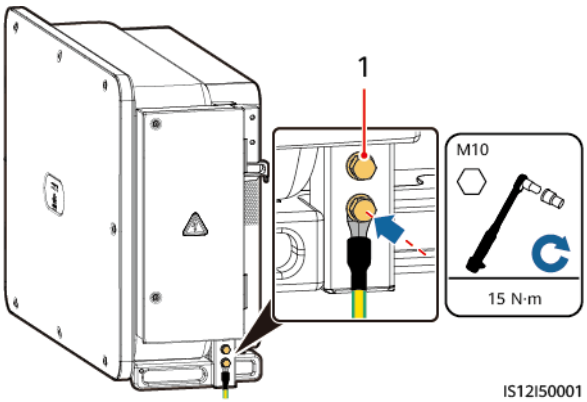

(1) Reserved PE point

----End

Follow-up Procedure

To enhance the corrosion resistance of a ground terminal, you are advised to apply silicone grease or paint on it after connecting the PE cable.

5.4 Opening the Maintenance Compartment Door

Precautions

CAUTION

- Do not open the panel of the inverter.
- Before opening the maintenance compartment door, ensure that no electrical connections are made for the inverter on the AC or DC side.
- Do not open the maintenance compartment door in rainy or snowy days. If you have to, take protective measures to prevent rain or snow from entering the maintenance compartment.
- Do not leave unused screws in the maintenance compartment.

Procedure

Step 1 Open the maintenance compartment door and install the support bar.

Copyright © Huawei Technologies Co., Ltd.

Figure 5-3 Opening the maintenance compartment door

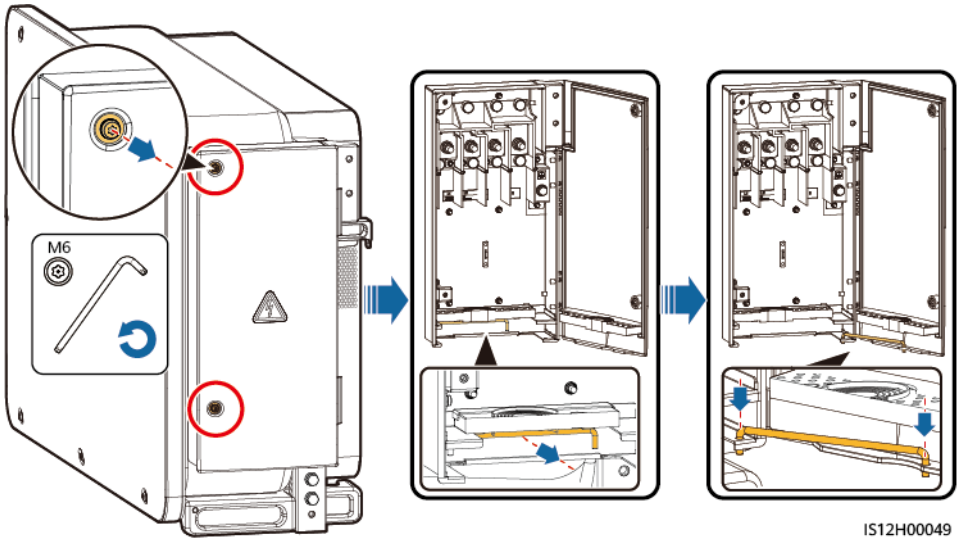

Step 2 Remove the accessories and set them aside.

Figure 5-4 Removing the accessories

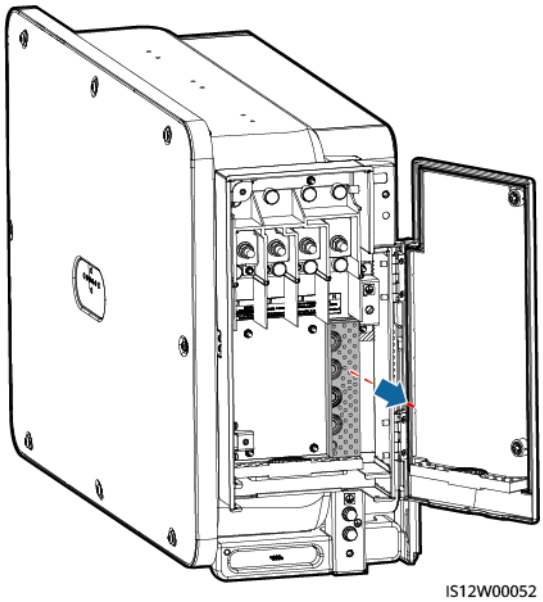

Step 3 Select a crimping module based on the type of the AC output power cable in use.

Copyright © Huawei Technologies Co., Ltd.

Figure 5-5 Selecting a crimping module

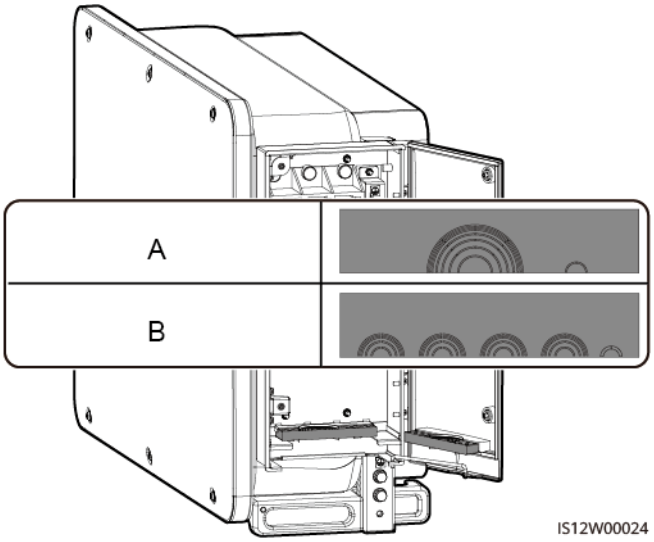

(A) Crimping module for multi-core cables (B) Crimping module for single-core cables

----End

Follow-up Procedure

Cut off the joints between rubber rings using scissors and then remove a rubber ring. All rubber rings are removed in the same way.

NOTICE

Remove a rubber ring strictly based on the cable diameter range and ensure that the crimping module is not damaged. Otherwise, the IP rating of the device will be affected.

Figure 5-6 Removing a rubber ring

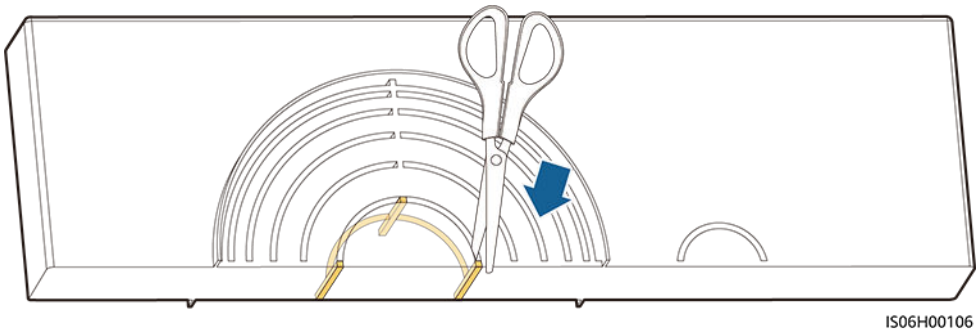

 Copyright © Huawei Technologies Co., Ltd.

5.5 (Optional) Installing the Power Cable of the Tracking System

Precautions

WARNING

- The tracking system obtains power from the AC three-phase power grid. The rated voltage of the power supply is the rated output voltage of the inverter.
- Keep flammable materials away from cables.
- Cables must be protected with a conduit to prevent short circuits caused by insulation layer damage.
- Connecting the power cable of the tracking system after the AC output power cable will cause reworking.

Procedure

Step 1 Prepare a cable.

Step 2 Remove the corresponding rubber rings.

Step 3 Connect the power cable of the tracking system.

Figure 5-7 Connecting the power cable of the tracking system

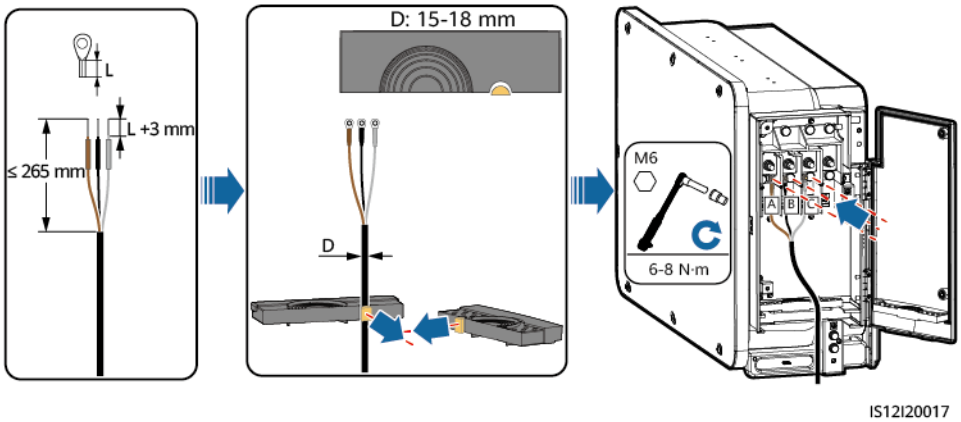

----End

5.6 Connecting an AC Output Power Cable

Prerequisites

- To ensure that the inverter can be safely disconnected from the power grid when an exception occurs, connect an AC switch to the AC side of the inverter.

Copyright © Huawei Technologies Co., Ltd.

Select an appropriate AC switch in accordance with local industry standards and regulations.

- Connect the AC output power cable according to the requirements specified by local power grid operators.
- Connecting the power cable of the tracking system after the AC output power cable will cause reworking.

Figure 5-8 Cable connection sequence

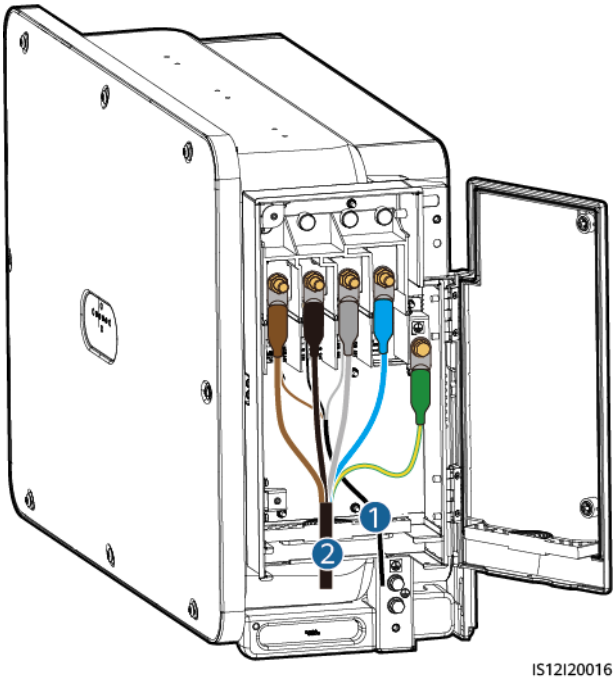

(1) Power cable of the tracking system (2) AC output power cable

WARNING

- Do not connect loads between an inverter and an AC switch that directly connects to the inverter. Otherwise, the switch may trip by mistake.
- If an AC switch is used with specifications beyond local standards, regulations, or the Company's recommendations, the switch may fail to turn off in a timely manner in case of exceptions, causing serious faults.

CAUTION

Each inverter shall be equipped with an AC output switch. Multiple inverters shall not connect to the same AC switch.

Cables must be vertically routed into the maintenance compartment, PV terminals, and other wiring terminals to avoid damage caused by horizontal stress on the terminals, which is not covered under the warranty.

 Copyright © Huawei Technologies Co., Ltd.

Requirements on an OT or DT Terminal

- If a copper cable is used, use copper wiring terminals.
- If a copper-clad aluminum cable is used, use copper wiring terminals.
- If an aluminum alloy cable is used, use copper-aluminum transition wiring terminals, or aluminum wiring terminals along with copper-aluminum transition spacers.

NOTICE

- Do not connect aluminum wiring terminals to the AC terminal block. Otherwise the electrochemical corrosion will occur and affect the reliability of cable connections.
- Comply with the IEC61238-1 requirements when using copper-aluminum transition wiring terminals, or aluminum wiring terminals along with copper-aluminum transition spacers.
- If copper-aluminum transition spacers are used, pay attention to the front and rear sides. Ensure that the aluminum sides of spacers are in contact with aluminum wiring terminals, and copper sides of spacers are in contact with the AC terminal block.

Figure 5-9 Requirements for the OT/DT terminal

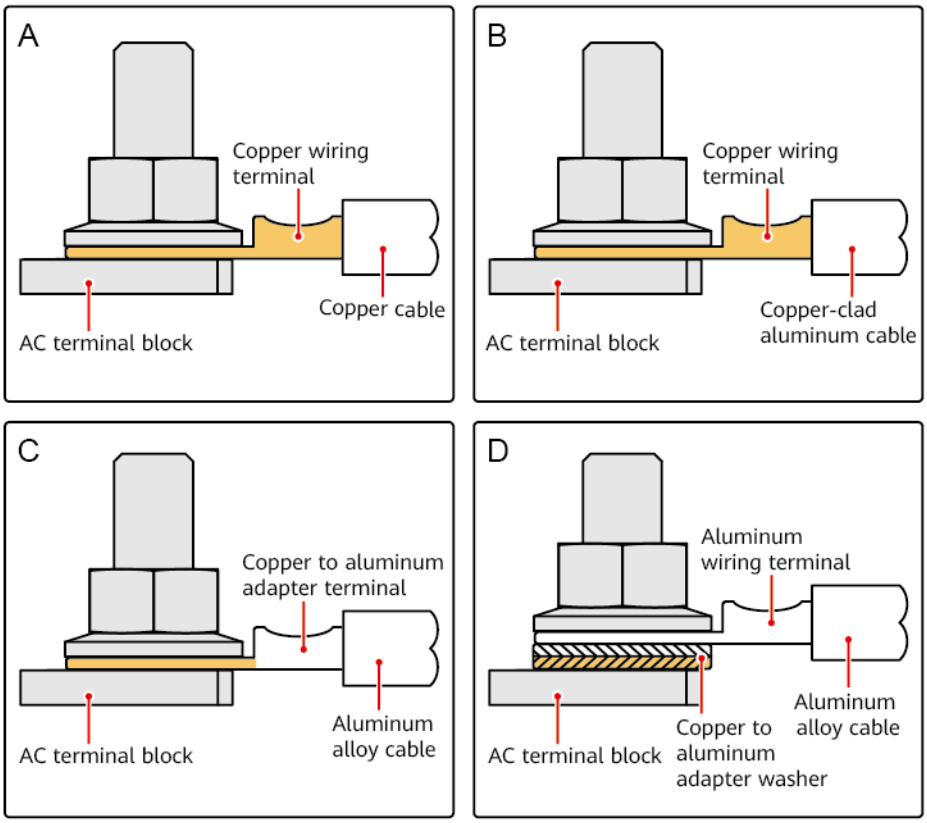

Copyright © Huawei Technologies Co., Ltd.

Figure 5-10 Wiring ports

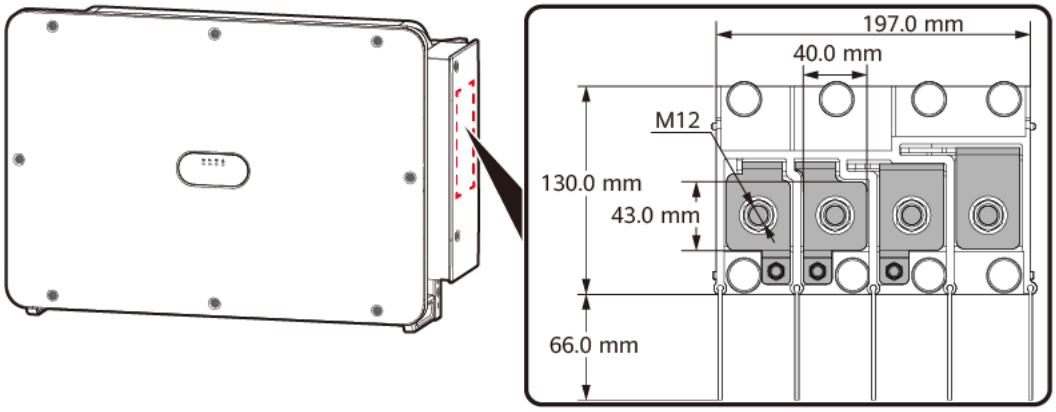

Figure 5-11 Specifications of the crimped OT/DT terminal

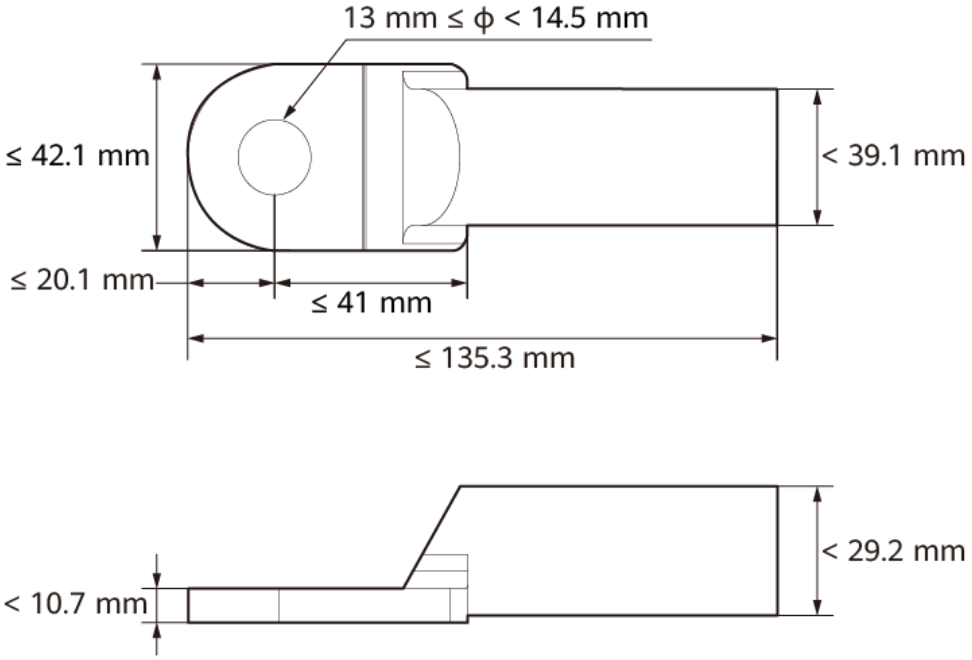

Procedure

Step 1 Prepare a cable.

Step 2 Remove rubber rings based on the cable diameter range.

Step 3 Secure the AC output power cable and PE cable.

Step 4 Retract the support bar.

Step 5 Close the maintenance compartment door and tighten the two screws on the door.

Copyright © Huawei Technologies Co., Ltd.

NOTICE

- Reserve sufficient slack for the PE wire to ensure that the PE wire is the last wire bearing the force when the AC output power cable is subject to a pulling force due to force majeure.
- The cable outer diameter can be measured using the ruler sticker in the maintenance compartment.
- Ensure that the cable jacket is in the maintenance compartment.
- Ensure that the AC output power cables are connected securely. Otherwise, the inverter may fail to operate, or become overheated in operation due to an unreliable connection, which will damage the terminal block.
- Before closing the maintenance compartment door, check that the cables are connected correctly and securely, and clean up the foreign matter from the maintenance compartment.
- If a screw on the maintenance compartment door is lost, obtain the spare screw from the fitting bag tied at the bottom of the maintenance compartment.

Figure 5-12 Multi-core cable connection

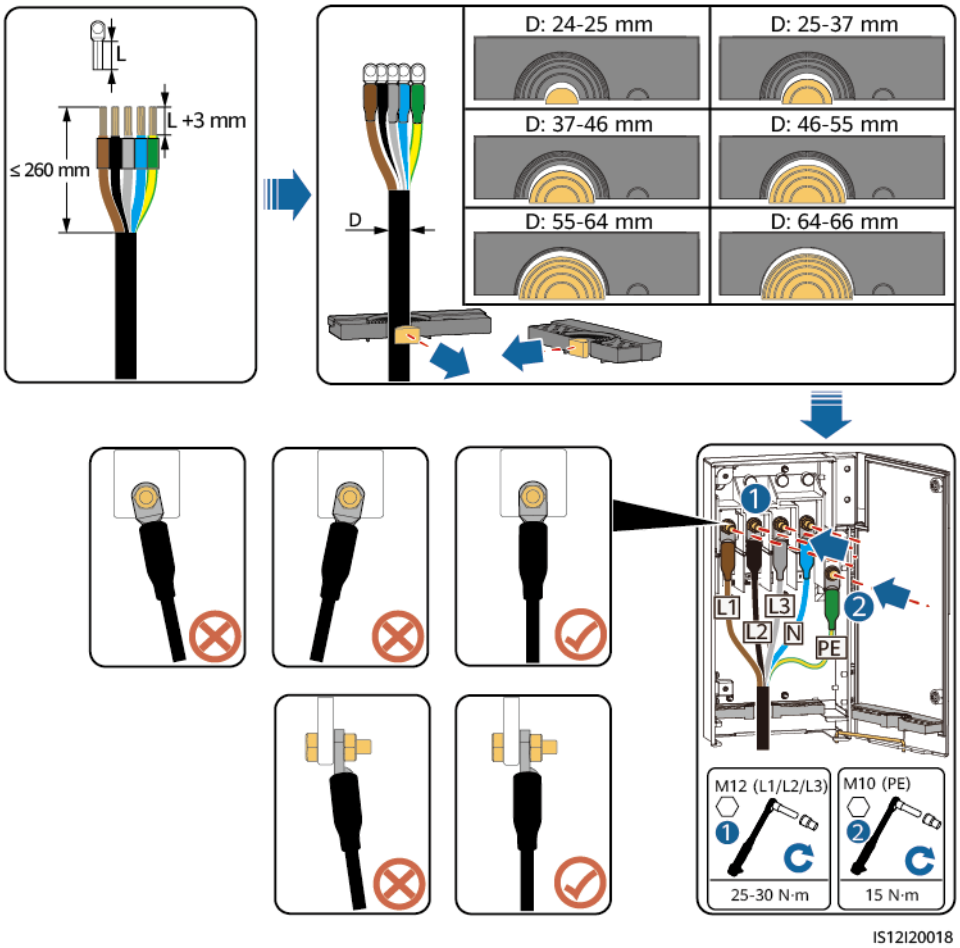

Copyright © Huawei Technologies Co., Ltd.

Figure 5-13 Single-core cable connection

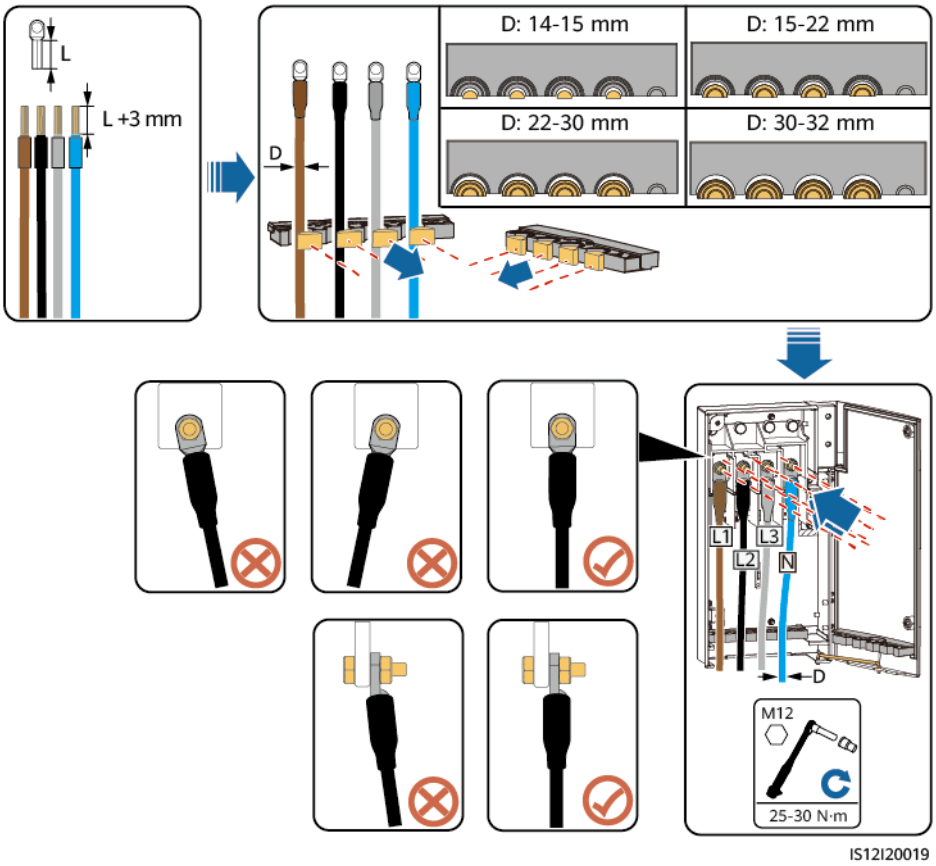

Copyright © Huawei Technologies Co., Ltd.

Figure 5-14 Connection diagram

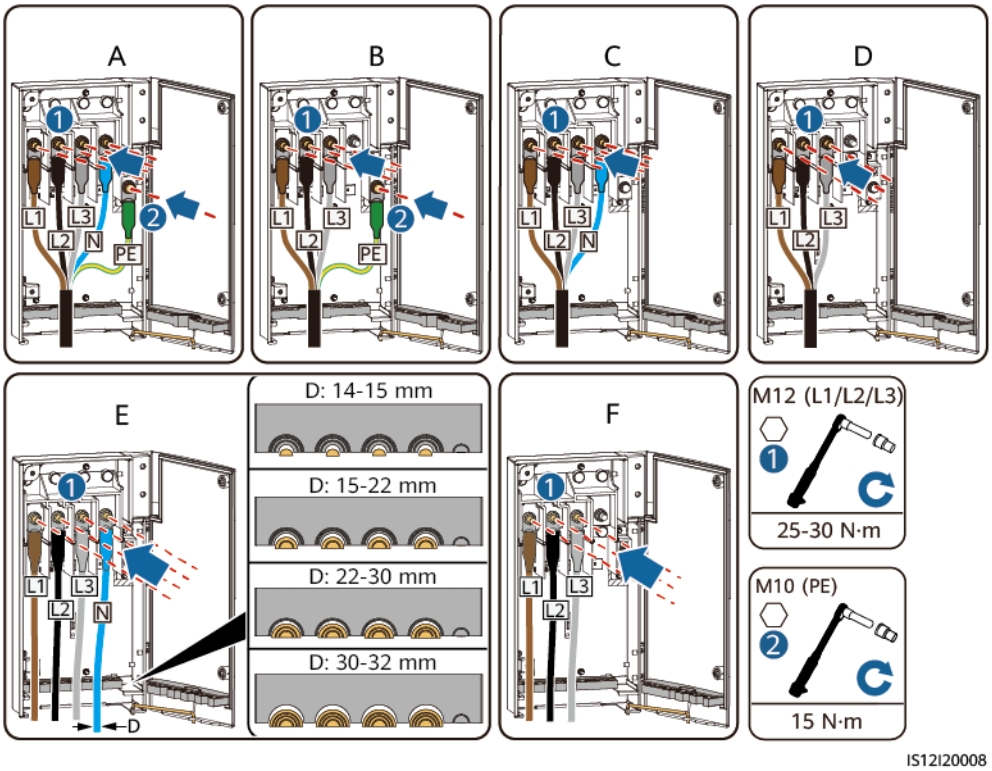

(A) Five-core cable

(B) Four-core cable (including the PE wire)

(C) Four-core cable (including the neutral wire)

(D) Three-core cable

(E) Single-core cable (including the neutral wire)

(F) Single-core cable (excluding the neutral wire)

NOTE

The cable colors shown in the figures are for reference only. Select an appropriate cable according to the local standards.

Figure 5-15 Closing the maintenance compartment door

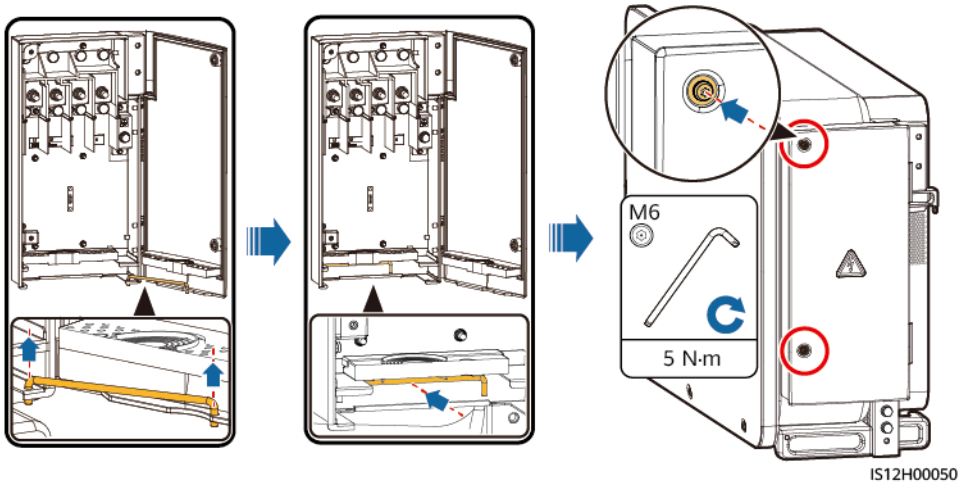

----End

Copyright © Huawei Technologies Co., Ltd.

5.7 Connecting DC Input Power Cables

CAUTION

There are two models of PV connectors delivered with the device: Amphenol Helios H4 and Staubli MC4. PV connectors of different models cannot be used together. Device damage caused by mixed use of different PV connectors is not covered by the warranty.

- If Amphenol Helios H4 PV connectors are used, perform operations by referring to **5.7.3 Connecting Cables to Amphenol Helios H4 Terminals**.
- If Staubli MC4 PV connectors are used, perform operations by referring to **5.7.4 Connecting Cables to Staubli MC4 Terminals**.

CAUTION

Take waterproof and insulation measures for unused DC power cables to avoid personal injury or property loss caused by accidental contact with high voltage or other reasons.

5.7.1 Cable Connection Description

Precautions

DANGER

- Before connecting the DC input power cables, ensure that the DC voltage is within the safe range (lower than 60 V DC) and that the three DC switches (**DC SWITCH**) on the inverter are **OFF**. Otherwise, the high voltage may result in electric shocks.
- If you set the **DC SWITCH** to **ON** by mistake when connecting or disconnecting DC input power cables, do not remove or insert DC input terminals. For details about how to remove and insert DC input terminals, see **7.2 Power-Off for Maintenance**.
- When the inverter operates in grid-tied mode, do not perform maintenance or operations on the DC input power cables, such as connecting or disconnecting a PV string or a PV module in the PV string. Otherwise, electric shocks or arcing (which may cause fire) may occur.

Copyright © Huawei Technologies Co., Ltd.

WARNING

Ensure that the following conditions are met. Otherwise, the inverter may be damaged or even a fire may occur.

- According to IEC 62548, the maximum open-circuit voltage of each PV string cannot exceed 1100 V DC at the lowest average annual dry-bulb temperature.
- The polarities of electric connections must be correct on the DC input side. The positive and negative terminals of a PV string must be connected to corresponding positive and negative DC input terminals of the inverter.

WARNING

During the installation of PV strings and the inverter, the positive or negative terminals of PV strings may be short-circuited to ground if the power cables are not properly installed or routed. In this case, an AC or DC short circuit may occur and damage the inverter. The resulting device damage is not covered under any warranty.

NOTICE

- Ensure that the PV module output is well insulated to ground.
- The PV strings connecting to the same MPPT circuit shall use the same model and quantity of PV modules.
- To ensure the optimal power generation of the system, the voltage difference between different MPPT circuits shall be less than 85 V.
- The inverter does not support full parallel connection for PV strings (full parallel connection: PV strings connect to one another in parallel outside the inverter and then connect to it separately).

Terminal Description

The inverter provides 20 DC input terminals. PV1–PV8 (MPPT1–MPPT4) are controlled by DC SWITCH 1, PV9–PV14 (MPPT5–MPPT7) are controlled by DC SWITCH 2, and PV15–PV20 (MPPT8–MPPT10) are controlled by DC SWITCH 3.

Figure 5-16 DC terminals

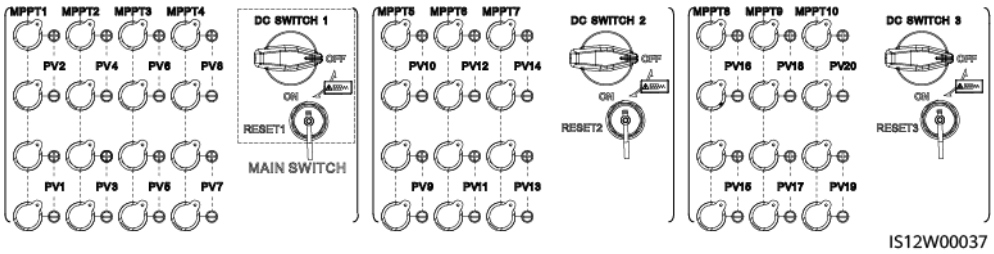

If not all DC input terminals need to be connected, the terminal selection must meet the following requirements:

Copyright © Huawei Technologies Co., Ltd.

1. Evenly distribute the DC input power cables to the DC input terminals controlled by the three DC switches. DC SWITCH 1 is preferred.
2. The even-numbered PV terminals are preferred to maximize the connections of MPPTs.
3. If the number of PV inputs is 11 to 19, connect cables to the odd-numbered PV terminals from PV1 and PV19, and avoid connections to adjacent MPPTs if possible.

For 11 to 19 PV strings, the following DC input terminals are recommended.

Figure 5-17 DC input terminal connection solution

Number of PV Inputs	SWITCH 1				SWITCH 2			SWITCH 3		
	MPPT1	MPPT2	MPPT3	MPPT4	MPPT5	MPPT6	MPPT7	MPPT8	MPPT9	MPPT10
11	PV2	PV4	PV6	PV8	PV10	PV12	PV14	PV16	PV18	PV20
	PV1									
12	PV2	PV4	PV6	PV8	PV10	PV12	PV14	PV16	PV18	PV20
	PV1									PV19
13	PV2	PV4	PV6	PV8	PV10	PV12	PV14	PV16	PV18	PV20
	PV1		PV5							PV19
14	PV2	PV4	PV6	PV8	PV10	PV12	PV14	PV16	PV18	PV20
	PV1		PV5					PV15		PV19
15	PV2	PV4	PV6	PV8	PV10	PV12	PV14	PV16	PV18	PV20
	PV1		PV5		PV9			PV15		PV19
16	PV2	PV4	PV6	PV8	PV10	PV12	PV14	PV16	PV18	PV20
	PV1		PV5		PV9		PV13		PV17	PV19
17	PV2	PV4	PV6	PV8	PV10	PV12	PV14	PV16	PV18	PV20
	PV1	PV3		PV7	PV9		PV13		PV17	PV19
18	PV2	PV4	PV6	PV8	PV10	PV12	PV14	PV16	PV18	PV20
	PV1	PV3	PV5		PV9	PV11		PV15	PV17	PV19
19	PV2	PV4	PV6	PV8	PV10	PV12	PV14	PV16	PV18	PV20
	PV1	PV3	PV5	PV7	PV9		PV13	PV15	PV17	PV19

IS12P00012

5.7.2 Measuring the Insulation Resistance of PV Strings to the Ground

NOTICE

In a PV system, the insulation resistance of a PV string reflects the insulation status between the PV string and the ground. A low insulation resistance indicates poor insulation performance, which may cause personal safety and inverter performance problems. Therefore, before connecting PV strings to the inverter, measure the insulation resistance of each PV string to the ground and check that the insulation resistance is normal to ensure normal operation of the inverter.

Prerequisites

The voltage between the positive and negative terminals of a PV string is normal.

Set a multimeter to the DC position (measurement range ≥ 1100 V) and use it to measure the voltage between the positive and negative terminals of a PV string.

Copyright © Huawei Technologies Co., Ltd.

If...	Then...
Voltage < 0	The positive and negative terminals are connected in reverse polarity. Rectify the connection.
Voltage > 1100 V	There are too many PV modules, which may result in inverter damage. Do not connect the inverter.

Procedure

Step 1 Use an insulation resistance tester to measure the insulation resistance of a PV– cable to the ground. Add a maximum of 1500 V DC voltage between the cable and the ground, and check the insulation resistance.

Figure 5-18 Measuring the insulation resistance of PV– for each PV string

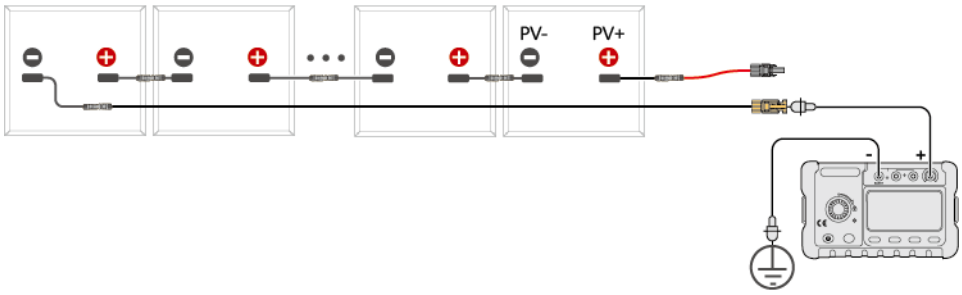

If...	Then...
Insulation resistance ≥ 1 MΩ	This is normal.
Insulation resistance < 1 MΩ	You need to check the insulation of the cable or PV string. Go to **Step 2**.

NOTE

You can prepare a tool to connect all PV– cables together using a conversion adapter and measure the ground insulation resistance of all PV– cables of an inverter at a time.

Copyright © Huawei Technologies Co., Ltd.

Figure 5-19 Measuring the insulation resistance of PV– for all PV strings

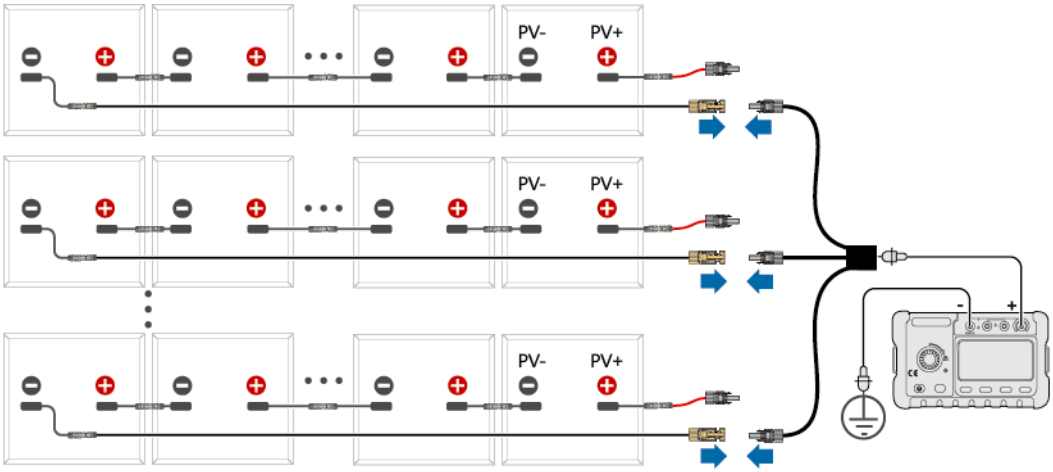

If...	Then...
Insulation resistance ≥ 1 MΩ	This is normal.
Insulation resistance < 1 MΩ	You need to check the insulation of the cables or PV strings.

Step 2 Disconnect the extension cable from the PV string. Connect the extension cable to the branch cable and use an insulation resistance tester to measure the insulation resistance of the extension cable to the ground. Add a maximum of 1500 V DC voltage between the cable and the ground, and check the insulation resistance.

Figure 5-20 Measuring the insulation resistance of the extension cable

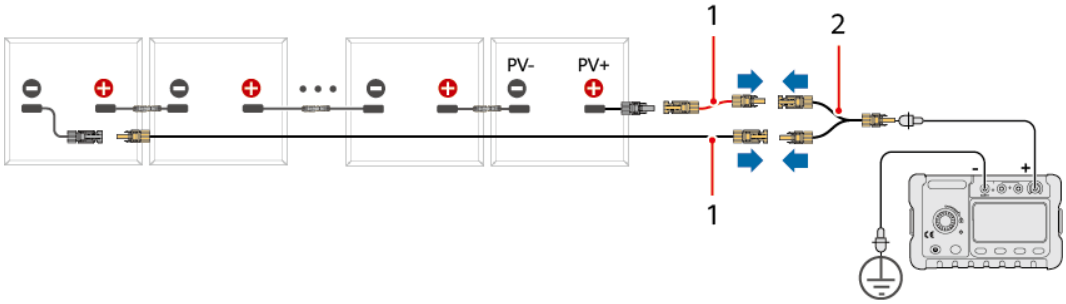

(1) Extension cable (2) Branch cable

If...	Then...
Insulation resistance ≥ 1 MΩ	The extension cable is normal. Go to **Step 3**.

Copyright © Huawei Technologies Co., Ltd.

If...	Then...
Insulation resistance < 1 MΩ	The extension cable is abnormal. Check the cable. After the check is completed, go to **Step 1** to check whether the PV string is normal. If the PV string is abnormal, go to **Step 3**.

Step 3 Measure the insulation resistance of the PV module. You are advised to consult the PV module manufacturer to determine whether the PV module is abnormal.

----End

5.7.3 Connecting Cables to Amphenol Helios H4 Terminals

Specifications

Cables with high rigidity, such as armored cables, are not recommended, because poor contact may be caused by the bending of cables.

CAUTION

Use the Amphenol Helios H4 PV connectors delivered with the inverter. If the PV connectors are lost or damaged, purchase the connectors of the same model. The device damage caused by incompatible PV connectors is not covered under any warranty.

Procedure

Step 1 Prepare DC input power cables.

Step 2 Crimp positive and negative metal terminals.

Step 3 Insert the positive and negative metal terminals into the corresponding positive and negative connectors.

Step 4 Tighten the locking nuts on the positive and negative connectors.

Step 5 Insert the positive and negative connectors into the corresponding DC positive and negative input terminals of the inverter.

Copyright © Huawei Technologies Co., Ltd.

Figure 5-21 Connecting DC input power cables

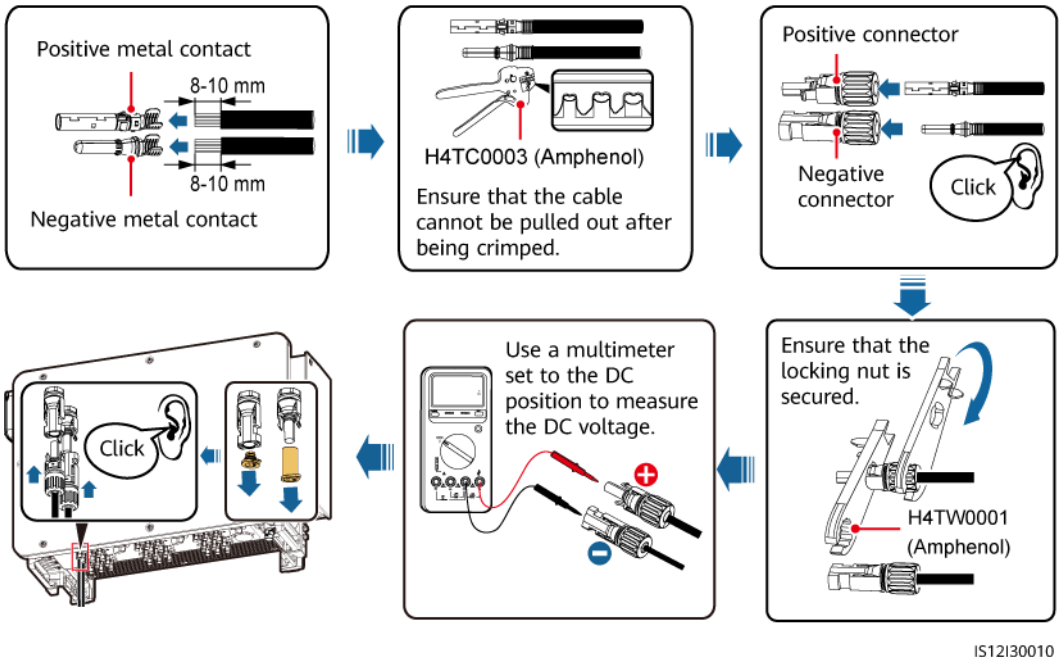

Figure 5-22 Connector connection

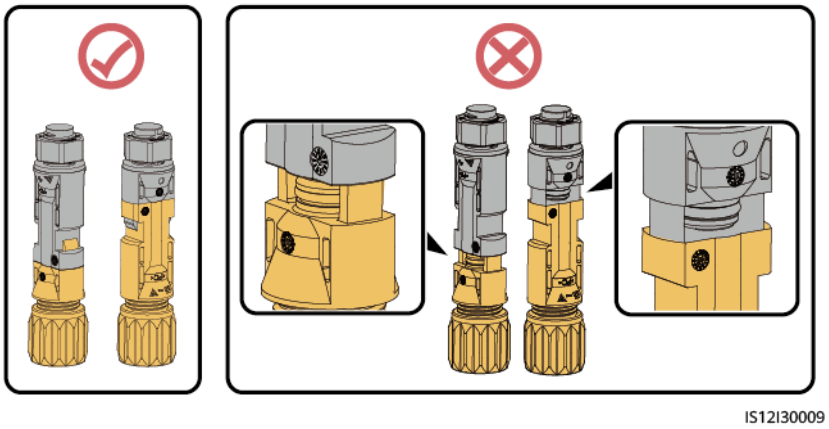

Copyright © Huawei Technologies Co., Ltd.

NOTICE

- If a DC input power cable is reversely connected and the **DC SWITCH** is set to **ON**, do not immediately operate the **DC SWITCH** or the positive and negative connectors. Otherwise, the device may be damaged. The resulting device damage is not covered by the product warranty. Wait until the night when solar irradiance declines and the PV string current drops to below 0.01 A. Then set the three DC switches (**DC SWITCH**) to **OFF**, remove the positive and negative connectors, and correct the polarities of the DC input power cable.
- Connect the connectors on the PV strings to the connectors on the inverter, and pull back the connectors on the PV strings along the axial direction to check whether the connectors are securely installed.
- Ensure that the connectors are properly connected. Any connector damage due to improper connection is not covered under any warranty.

Figure 5-23 DC input power cabling requirement

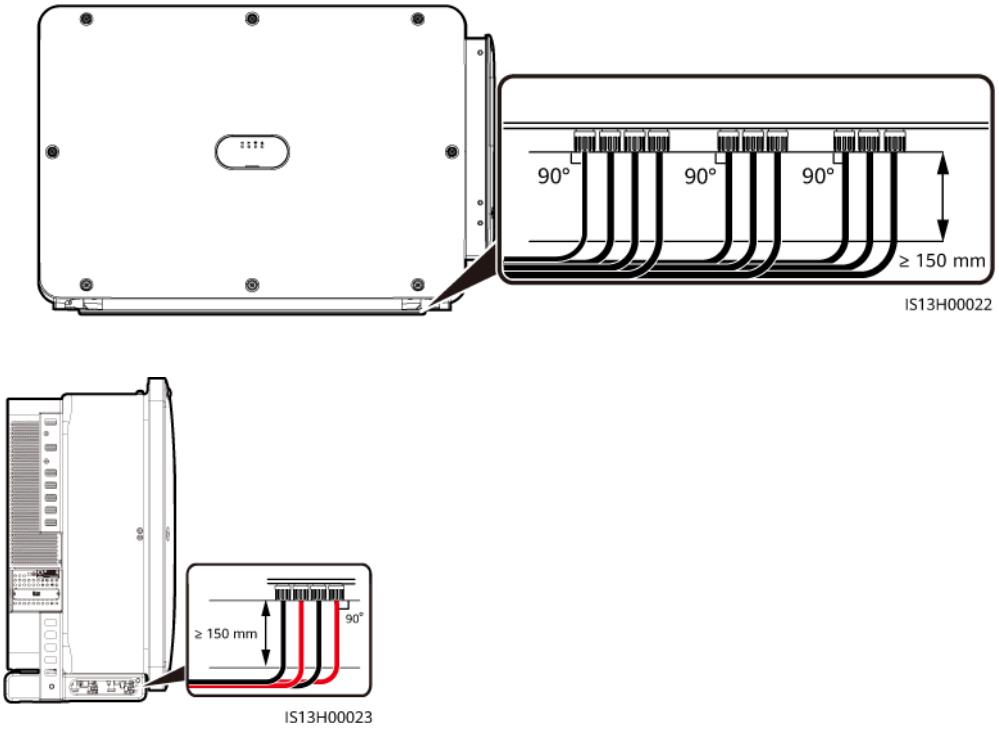

NOTICE

When installing DC input power cables, leave at least 150 mm of slack. The axial tension on PV connectors must not exceed 80 N. Radial stress or torque must not be generated on PV connectors.

Step 6 Use sealing plugs to seal the DC input terminals that are not connected to PV strings. Device damage caused by the absence of sealing plugs is not covered by the warranty.

Copyright © Huawei Technologies Co., Ltd.

Figure 5-24 Sealing plugs

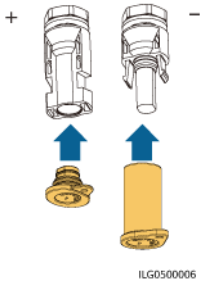

Table 5-3 Sealing plug models

PV+ Sealing Plug	PV– Sealing Plug
CT75A-FJB9-01	CT75A-FJB8-01
HH4SPM	HH4SPF
102-01-00064	102-01-00065
HY050-FCG-2	HY050-FCG-3

----End

5.7.4 Connecting Cables to Staubli MC4 Terminals

Specifications

Cables with high rigidity, such as armored cables, are not recommended, because poor contact may be caused by the bending of cables.

CAUTION

Use the Staubli MC4 PV connectors delivered with the inverter. If the PV connectors are lost or damaged, purchase the connectors of the same model. The device damage caused by incompatible PV connectors is not covered under any warranty.

Procedure

Step 1 Prepare DC input power cables.

Step 2 Crimp positive and negative metal terminals.

Step 3 Insert the positive and negative metal terminals into the corresponding positive and negative connectors.

Step 4 Tighten the locking nuts on the positive and negative connectors.

Step 5 Insert the positive and negative connectors into the corresponding DC positive and negative input terminals of the inverter.

Copyright © Huawei Technologies Co., Ltd.

Figure 5-25 Connecting DC input power cables

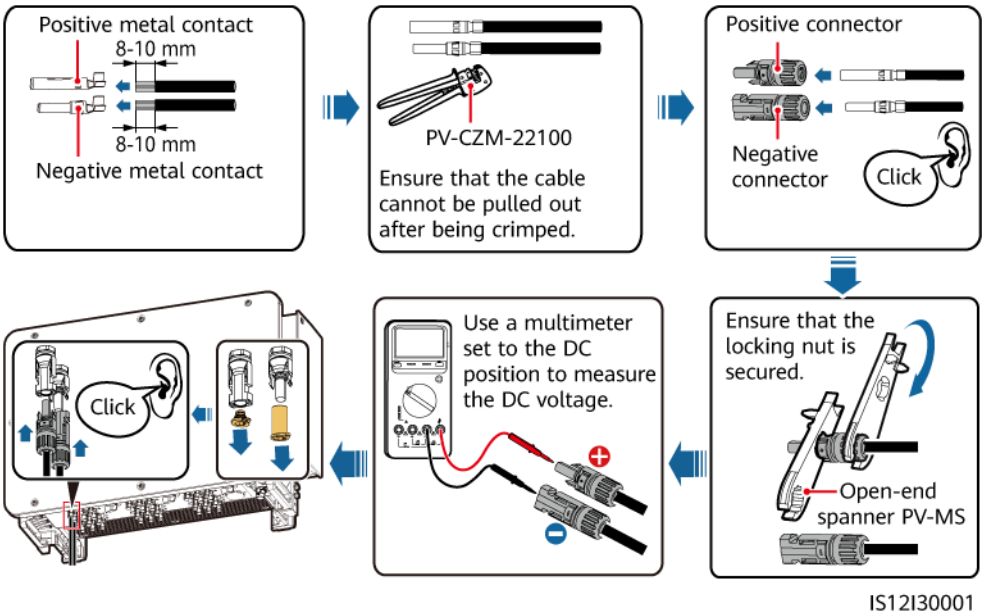

Figure 5-26 Connector connection

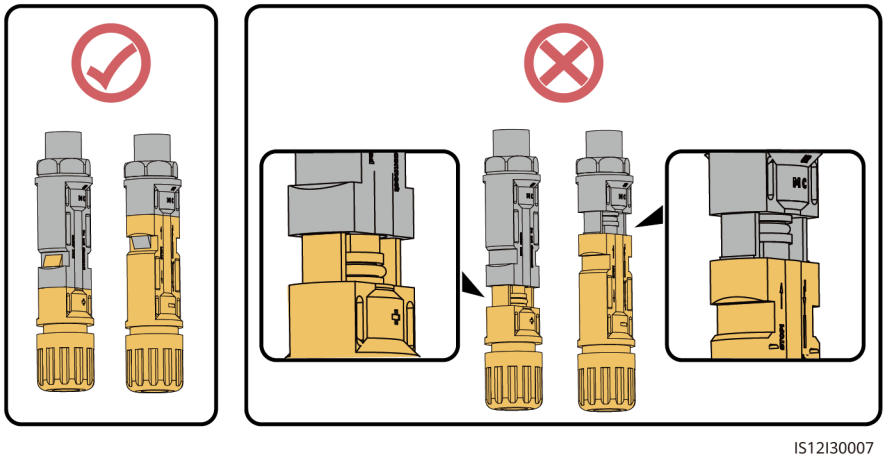

NOTICE

- If a DC input power cable is reversely connected and the **DC SWITCH** is set to **ON**, do not immediately operate the **DC SWITCH** or the positive and negative connectors. Otherwise, the device may be damaged. The resulting device damage is not covered by the product warranty. Wait until the night when solar irradiance declines and the PV string current drops to below 0.01 A. Then set the three DC switches (**DC SWITCH**) to **OFF**, remove the positive and negative connectors, and correct the polarities of the DC input power cable.
- Connect the connectors on the PV strings to the connectors on the inverter, and pull back the connectors on the PV strings along the axial direction to check whether the connectors are securely installed.
- Ensure that the connectors are properly connected. Any connector damage due to improper connection is not covered under any warranty.

Copyright © Huawei Technologies Co., Ltd.

Figure 5-27 DC input power cabling requirement

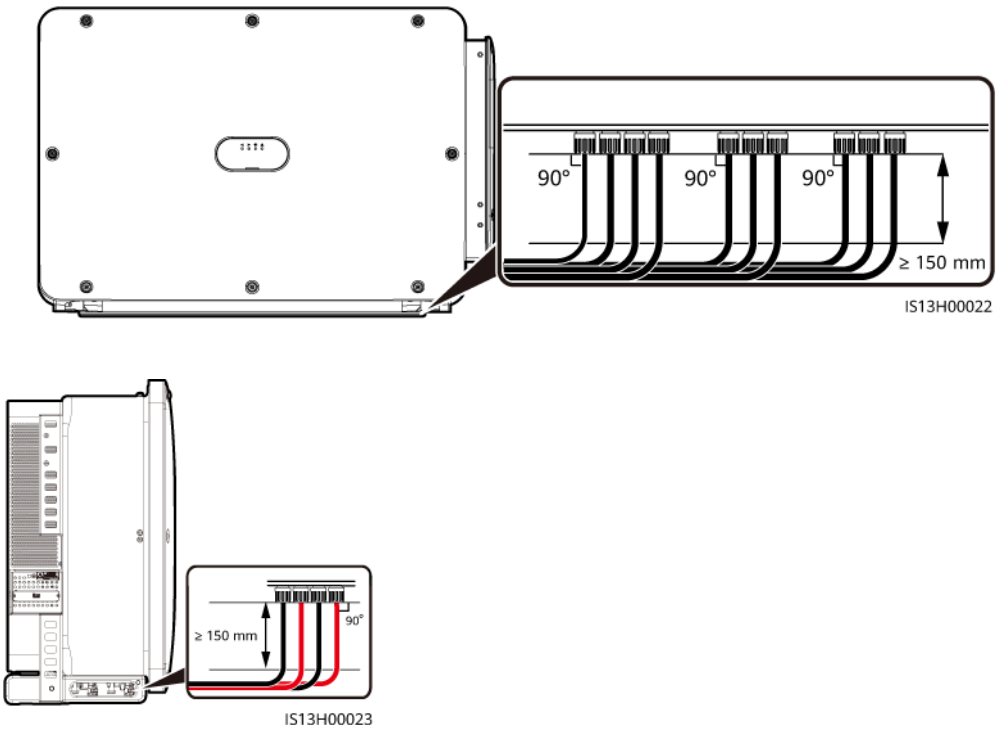

NOTICE

When installing DC input power cables, leave at least 150 mm of slack. The axial tension on PV connectors must not exceed 80 N. Radial stress or torque must not be generated on PV connectors.

Step 6 Use sealing plugs to seal the DC input terminals that are not connected to PV strings. Device damage caused by the absence of sealing plugs is not covered by the warranty.

Figure 5-28 Sealing plugs

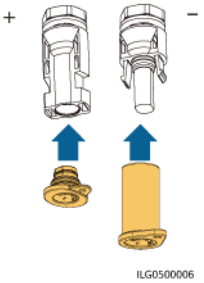

Copyright © Huawei Technologies Co., Ltd.

Table 5-4 Sealing plug models

PV+ Sealing Plug	PV– Sealing Plug
CT75A-FJB9-01	CT75A-FJB8-01
HH4SPM	HH4SPF
102-01-00064	102-01-00065
HY050-FCG-2	HY050-FCG-3

----End

5.8 Connecting RS485 communications cables

Communications Port Pin Definitions

Figure 5-29 Communications port

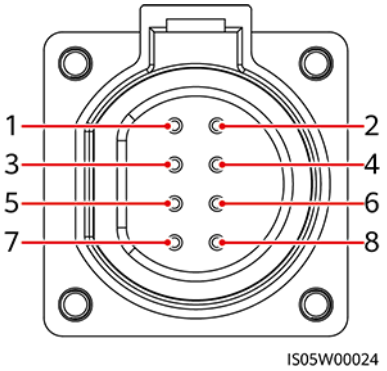

Port	Pin	Definition	Pin	Definition	Description
RS485-1	1	RS485A IN, RS485 differential signal+	2	RS485A OUT, RS485 differential signal+	Used to cascade inverters or connect devices such as the SmartLogger.
	3	RS485B IN, RS485 differential signal–	4	RS485B OUT, RS485 differential signal–	
PE	5	PE, shield layer grounding	6	PE, shield layer grounding	-

Copyright © Huawei Technologies Co., Ltd.

Port	Pin	Definition	Pin	Definition	Description
RS485-2	7	RS485A, RS485 differential signal+	8	RS485B, RS485 differential signal–	Used to connect an RS485 slave device. ● In the scenario of Smart Dongle networking or a single inverter, if power control at the grid connection point is adopted, the RS485-2 port is connected to the power meter to collect power information at the grid connection point. ● In the smart tracker control scenario, the RS485-2 port is connected to the tracker system to collect tracker information.

Connecting RS485 Communications Cables

When routing communications cables, separate them from power cables and connect the shield layer to the PE point to prevent communication from being affected. This section describes how to connect three communications cables.

 Copyright © Huawei Technologies Co., Ltd.

Figure 5-30 Connecting RS485 communications cables (4–8 mm four-hole rubber ring)

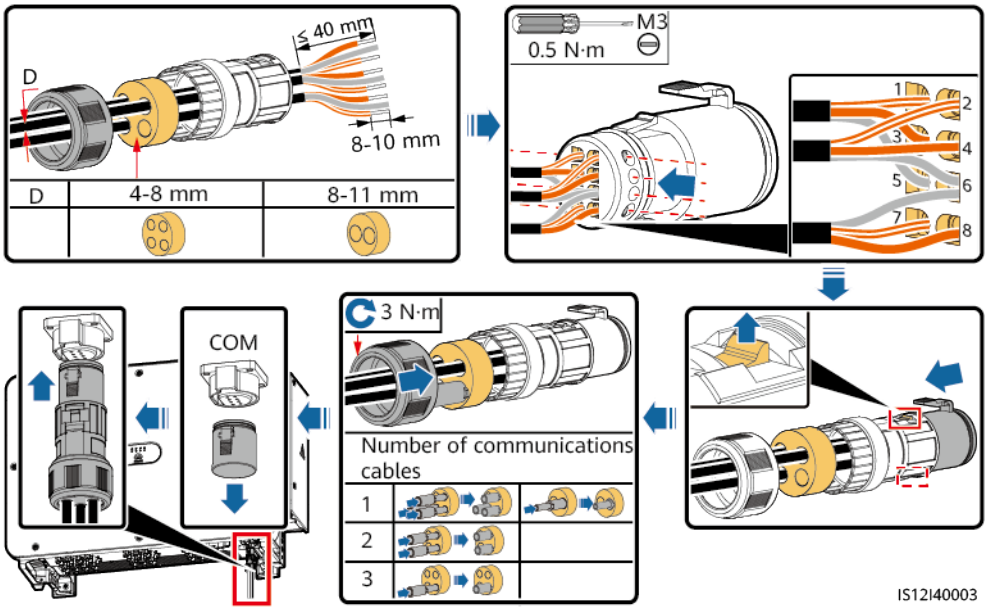

Figure 5-31 Connecting RS485 communications cables (4–8 mm two- or three-hole rubber ring)

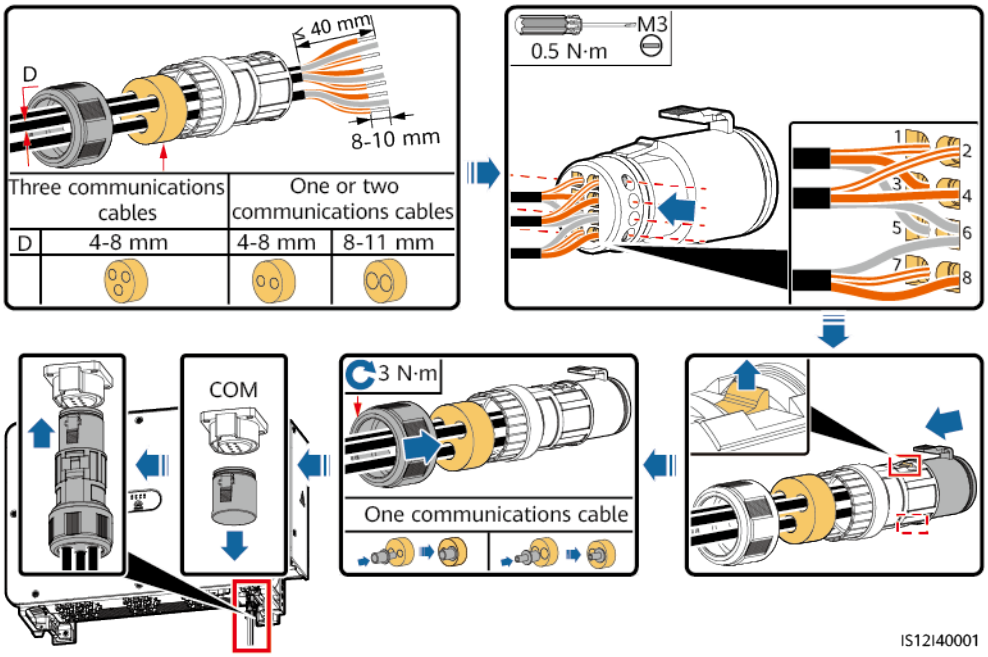

5.9 (Optional) Installing the Smart Dongle

- 4G Smart Dongle

Copyright © Huawei Technologies Co., Ltd.

NOTICE

- You do not need to install a SIM card if your Smart Dongle is already configured with one. The configured SIM card is a China Mobile card and can be used only on the Smart Dongle. Before installation, check whether the site is effectively covered by China Mobile signals. If not, prepare a SIM card of other operators.
- If your Smart Dongle is not configured with a SIM card, you need to prepare one (dimensions: 25 mm x 15 mm; capacity: ≥ 64 KB).
- When installing the SIM card, determine its installation direction based on the silk screen and arrow on the card slot.
- Press the SIM card in place to lock it, indicating that the SIM card is correctly installed.
- When removing the SIM card, push it inward to eject it.
- When reinstalling the enclosure of the Smart Dongle, ensure that the snap-fits click into place.

Figure 5-32 Installing the 4G Smart Dongle (SDongleB-06)

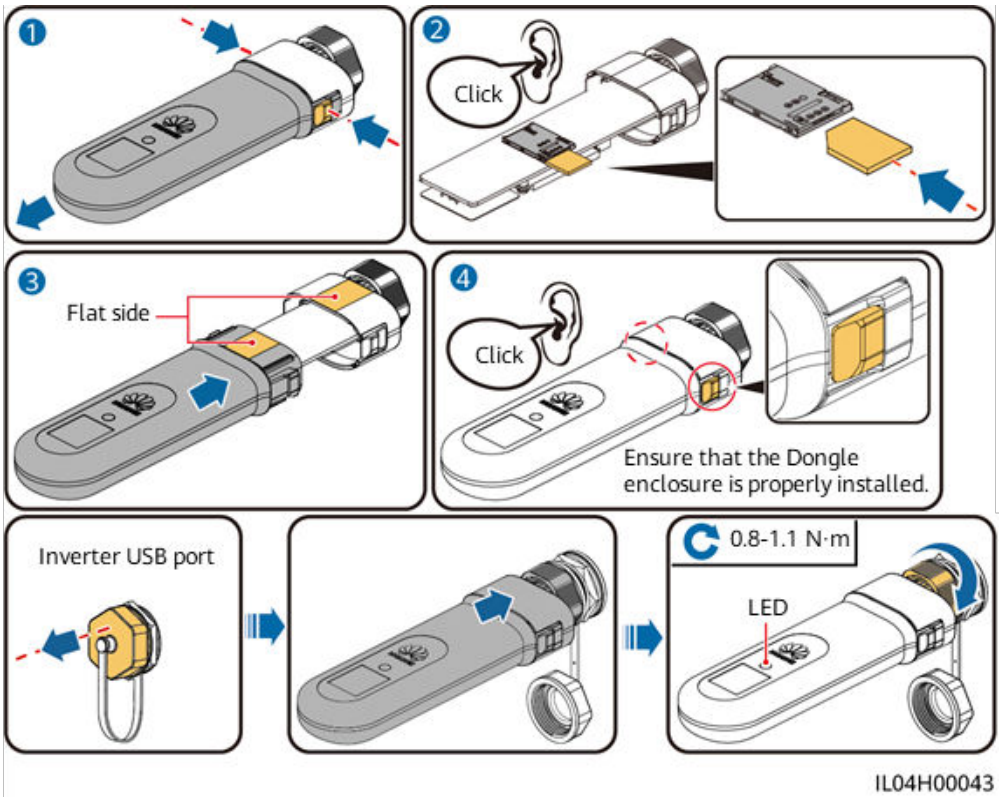

- WLAN-FE Smart Dongle (WLAN communication)

Copyright © Huawei Technologies Co., Ltd.

Figure 5-33 Installing the WLAN-FE Smart Dongle (SDongleA-05 for the WLAN communication scenario)

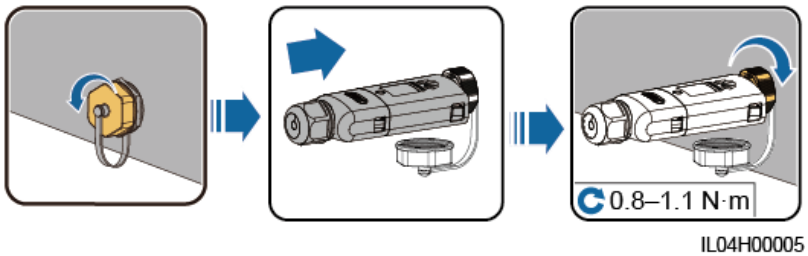

- WLAN-FE Smart Dongle (FE communication)

Figure 5-34 Installing the WLAN-FE Smart Dongle (SDongleA-05 for the FE communication scenario)

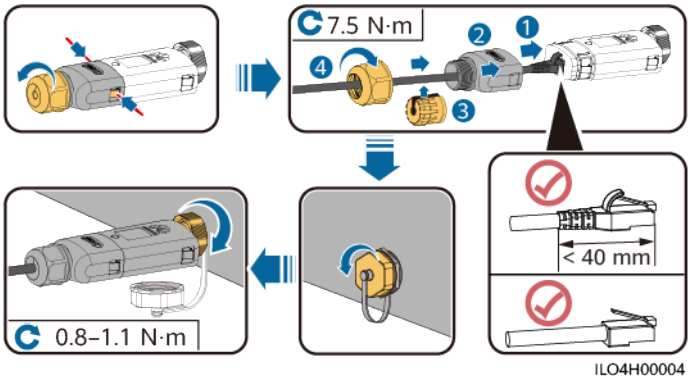

NOTICE

Install the network cable before installing the Smart Dongle on the inverter.

Copyright © Huawei Technologies Co., Ltd.

NOTE

- For details about how to use the WLAN-FE Smart Dongle SDongleA-05, see **SDongleA-05 Smart Dongle Quick Guide (WLAN-FE)**. You can scan the QR code below to obtain the guide.
- For details about how to use the 4G Smart Dongle SDongleB-06, see **SDongleB-06 Smart Dongle Quick Guide (4G)**. You can scan the QR code below to obtain the guide.

The quick guide is delivered with the Smart Dongle.

Copyright © Huawei Technologies Co., Ltd.

6 Commissioning

Prerequisites

DANGER

- Wear personal protective equipment and use dedicated insulated tools to avoid electric shocks or short circuits.

6.1 Check Before Power-On

No.	Acceptance Criteria
1	The inverter is installed correctly and securely.
2	The **DC SWITCH** and downstream AC switch are **OFF**.
3	All cables are connected correctly and securely.
4	The installation space is proper, and the installation environment is clean and tidy.
5	The maintenance compartment door is closed and the door screws are tightened.
6	Unused DC input terminals are sealed with sealing plugs.
7	Waterproof plugs on unused USB and RESET ports are tightened.

Copyright © Huawei Technologies Co., Ltd.

6.2 System Power-On

Precautions

DANGER

- Wear personal protective equipment and use dedicated insulated tools to avoid electric shocks or short circuits.

WARNING

When the LED2 is steady green (the inverter is connected to the power grid), do not turn on the DC switches. Otherwise, the inverter may be damaged because insulation resistance detection is not performed.

NOTICE

Before the equipment is put into operation for the first time, ensure that the parameters are set correctly by professional personnel. Incorrect parameter settings may result in noncompliance with local grid connection requirements and affect the normal operations of the equipment.

NOTICE

- Before turning on the AC switch between the inverter and the power grid, check that the AC voltage is within the specified range using a multimeter.
- Do not set the DC switch to the position labeled .
- When the system is powered on or running, ensure that there are no obstacles in path of travel of the DC switch handles (for example, the handles are not stuck by cables or mistakenly held by hands) to ensure that the handles can move freely. Otherwise, the DC switches cannot automatically turn off.
- If an inverter has not been running for more than half a year after being mounted, it must be checked and tested by professionals before being put into operation.

Procedure

Step 1 Turn on the AC switch between the inverter and the power grid.

Copyright © Huawei Technologies Co., Ltd.

NOTICE

If you perform step **Step 2** before step **Step 1**, the inverter reports a **Shutdown: Fault** alarm. You can start the inverter only after the fault is automatically cleared.

Step 2 Set **DC SWITCH 1 (MAIN SWITCH)** at the bottom of the inverter enclosure to **ON**. When you hear a click, the switch is on.

Step 3 Check the status of the PV connection indicator. Check the status of the PV connection indicator. If it is steady green, set **DC SWITCH 2** and **DC SWITCH 3** to **ON**.

Step 4 Observe the **LED indicator status** to check the operating status of the inverter.

----End

6.3 Power-On and Commissioning

6.3.1 Commissioning Methods and Process

The inverter can be commissioned on the SmartLogger WebUI or app.

Figure 6-1 Commissioning process on the SmartLogger WebUI

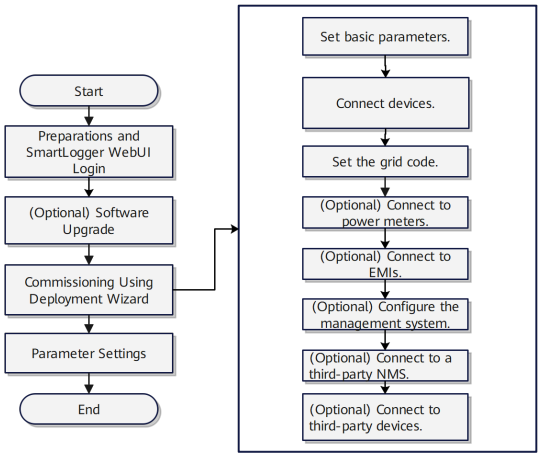

Copyright © Huawei Technologies Co., Ltd.

Figure 6-2 Commissioning process on the app

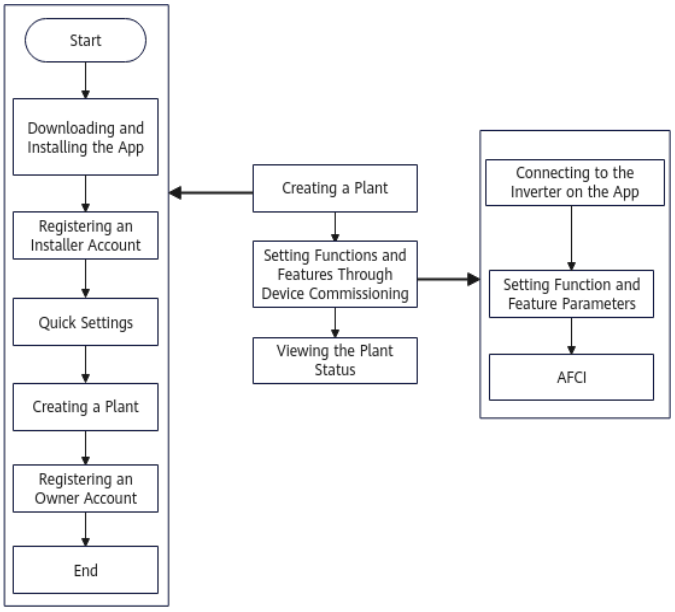

6.3.2 Commissioning the SUN2000 (Using the SmartLogger)

6.3.2.1 Preparations and SmartLogger WebUI Login

For details about preparations and WebUI login, see **SmartLogger3000 User Manual**, **SmartLogger5000B User Manual**, or **SmartMGC5000 User Manual**.

6.3.2.2 Software Upgrade

For details about software upgrade, see **SmartLogger3000 User Manual**, **SmartLogger5000B User Manual**, or **SmartMGC5000 User Manual**.

6.3.2.3 Commissioning Using the Deployment Wizard

Currently, only the SmartLogger3000 supports deployment using the WebUI.

Procedure

Step 1 Set basic parameters.

Step 2 Connect to devices.

- For RS485 communication, click **Search for Device**. The address is automatically allocated.
- For MBUS communication, click **Choose File** or **SN List** to add the SN of a device. Click **Submit** to deliver the added device. Then click **Search for Device**.

Step 3 After the device is connected, set the grid code based on the site requirements.

Step 4 Connect to power meters.

 Copyright © Huawei Technologies Co., Ltd.

Set related parameters by referring to "**Setting Meter Parameters**" in the *SmartLogger3000 User Manual*.

Step 5 Connect to EMIs.

Step 6 Connect to the management system.

Set related parameters by referring to "**Setting Parameters for Connecting to the Management System**" (content related to the management system) in the *SmartLogger3000 User Manual*.

Step 7 Connect to a third-party NMS.

Set related parameters by referring to "**Setting Parameters for Connecting to the Management System**" (content related to a third-party NMS) in the *SmartLogger3000 User Manual*.

Step 8 Connect to third-party devices.

Set related parameters by referring to "**Setting Custom Device Parameters**" in the *SmartLogger3000 User Manual*.

Step 9 Click **Finish** to complete the configuration.

----End

6.3.2.4 Parameter Settings

For details about parameter settings, see **SmartLogger3000 User Manual**, **SmartLogger5000B User Manual**, or **SmartMGC5000 User Manual**.

6.3.3 Commissioning the SUN2000 (Using the App)

6.3.3.1 Downloading and Installing the App

- You are advised to use an app to access the management system. You can scan the QR code below to download the app. You are advised to use a browser to scan the QR code.
- If the preceding app cannot be used, use the SUN2000 app for commissioning. You can scan the QR code below to download the app. You are advised to use a browser to scan the QR code.

SUN2000 (Android) SUN2000 (iOS)

6.3.3.2 Registering an Installer Account

For details about how to create the first **Installer** account, see section "Registering the Company's First Installer Account" in the app user manual.

For details about how to create multiple **Installer** accounts for the same company, see section "Registering an Owner Account or Another Installer Account" in the app user manual.

6.3.3.3 Quick Settings

For details, see section "Quick Settings" in the app device commissioning guide.

6.3.3.4 Creating a Plant

For details, see the section about connecting to a plant in the app user manual.

6.3.3.5 Registering an Owner Account

For details, see section "Registering an Owner Account or Another Installer Account" in the app user manual.

6.3.3.6 Commissioning Functions and Features

NOTICE

Only professionals are allowed to set the grid parameters, protection parameters, feature parameters, power adjustment parameters, and grid-tied point control parameters of the inverters. If the grid parameters, protection parameters, and feature parameters are incorrectly set, the inverters may not connect to the power grid. If the power adjustment parameters and grid-tied point control parameters are incorrectly set, the inverters may not connect to the power grid as required. In these cases, the energy yield will be affected.

Choose **Commission Device** and set related device parameters. For details about the parameters, see the app device commissioning guide.

 Copyright © Huawei Technologies Co., Ltd.

6.3.3.6.1 Setting Feed-in at Limited Current

Function

The output current of the PV power system can be limited or reduced to ensure that the output current is within the specified range.

This function applies only to the commercial and industrial (C&I) scenarios in the UK where the grid code is G99-TYPEA-LV, G99-TYPEB-LV, G99-TYPEB-HV, G99-TYPEB-HV-MV480, or G99-TYPEA-HV. The SUN2000 app version must be later than 6.24.00.563.

Scenario Where the App Connects to the Inverter or Smart Dongle

NOTICE

If a single inverter is connected to the power grid, a Smart Dongle must be used for networking.

Procedure

Step 1 On the home screen, choose **Power adjustment** > **Feed-in at limited current**.

Figure 6-3 Feed-in at limited current

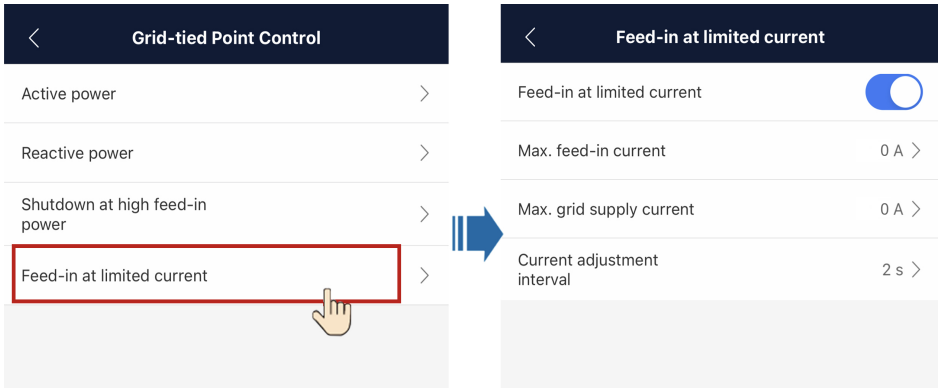

Table 6-1 Feed-in at limited current

Parameter		Description
Feed-in at limited current[a]	Feed-in at limited current	The default value is **Disable**. • If this parameter is set to **Disable**, feed-in at limited current will be unavailable. • If this parameter is set to **Enable**, feed-in at limited current will be available.

Copyright © Huawei Technologies Co., Ltd.

Parameter		Description
	Max. feed-in current[b]	Value range: [0, 30000 A] ● Due to external disturbances, the feed-in current may exceed the specified value by 2%. In this case, the inverter will adjust the current to a value within the range limit. ● After the user changes the maximum feed-in current, the inverter will adjust the current to a value within the range limit.
	Max. grid supply current	Value range: [0, 30000 A] If the grid supply current exceeds the specified value by 2%, the inverter will adjust the current to a value within the range limit.
	Current adjustment interval	Value range: [1, 5s] You are advised to keep the default value. A larger value indicates a lower current adjustment speed. If this parameter is set to 2s and the current at the grid connection point exceeds the threshold, the inverter adjusts the current every 2s.
Note a: If the inverter shuts down because the feed-in current adjustment is not complete within the specified time, the user needs to manually start the inverter. By default, the user needs to wait for at least 4 hours before starting the inverter. Note b: If the maximum feed-in current is not adjusted to a value within the range limit within 15s, the inverter will shut down and report a **Power Control Abnormal at Grid Connection Point** alarm.		

----End

Scenario Where the App Connects to the SmartLogger3000

NOTICE

- If multiple inverters are cascaded, the SmartLogger must be used.
- In this scenario, the SmartLogger refers to the SmartLogger3000.

Procedure

Step 1 On the home screen, choose **Power adjustment** > **Feed-in at limited current**.

Copyright © Huawei Technologies Co., Ltd.

Figure 6-4 Feed-in at limited current

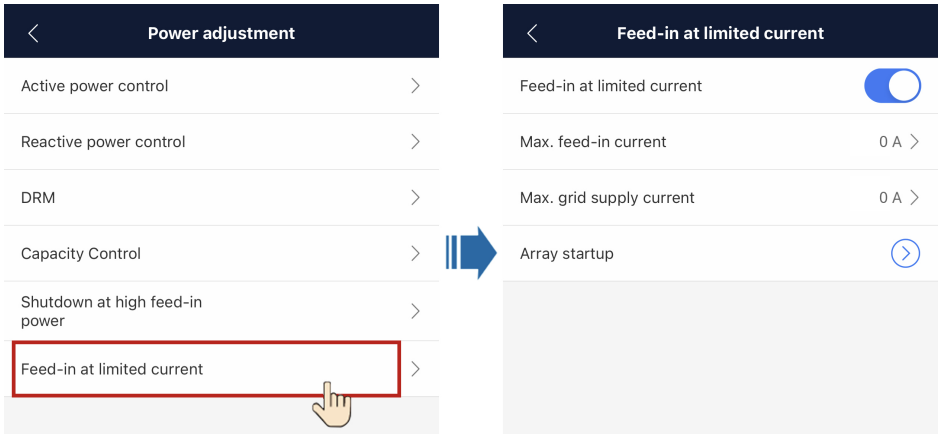

Table 6-2 Feed-in at limited current

Parameter		Description
Feed-in at limited current[a]	Feed-in at limited current	The default value is **Disable**. • If this parameter is set to **Disable**, feed-in at limited current will be unavailable. • If this parameter is set to **Enable**, feed-in at limited current will be available.
	Max. feed-in current[b]	Value range: [0, 30000 A] • Due to external disturbances, the feed-in current may exceed the specified value by 2%. In this case, the inverter will adjust the current to a value within the range limit. • After the user changes the maximum feed-in current, the inverter will adjust the current to a value within the range limit.
	Max. grid supply current	Value range: [0, 30000 A] If the grid supply current exceeds the specified value by 2%, the inverter will adjust the current to a value within the range limit.
	Array startup	All inverters in the array can be started by one click.
Note a: If the inverter shuts down because the feed-in current adjustment is not complete within the specified time, the user needs to manually start the inverter. By default, the user needs to wait for at least 4 hours before starting the inverter. Note b: If the maximum feed-in current is not adjusted to a value within the range limit within 15s, the inverter will shut down and report a **Power Control Abnormal at Grid Connection Point** alarm.		

----End

Copyright © Huawei Technologies Co., Ltd.

Scenario Where the App Connects to the SmartLogger5000B or SmartMGC5000B

NOTICE

- In SmartLogger networking, multiple inverters can be cascaded.
- SmartLogger: SmartLogger5000B or SmartMGC5000B

Procedure

1. Connect to the SmartLogger on the app and log in to the local commissioning screen of the device.
2. On the home screen, choose **Power adjustment** > **Capacity Control** and perform operations as required.

Figure 6-5 Feed-in at limited current

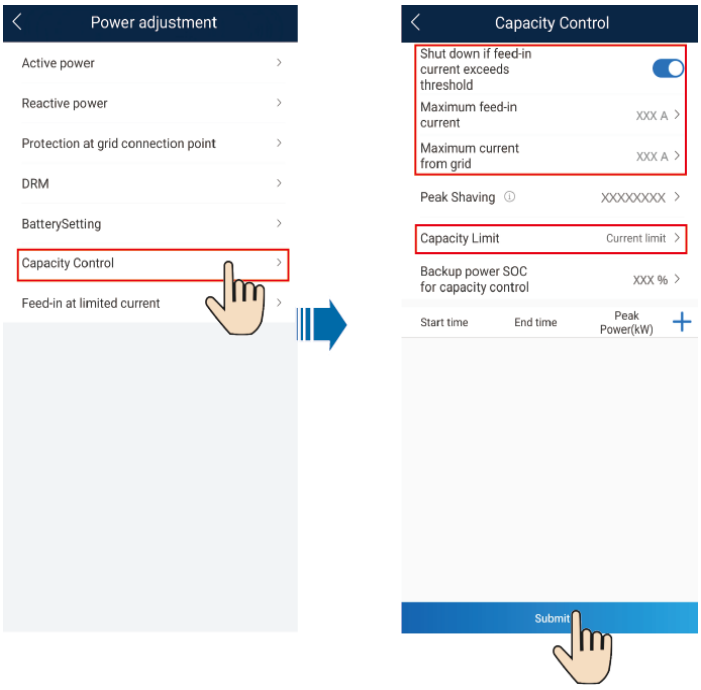

Table 6-3 Capacity control

Parameter	Description	Remarks
Capacity Limit	• **No Control**: disables this function. • **Current limit**: The current of electricity purchased from or sold to the grid cannot exceed the preset current limit.	-

Copyright © Huawei Technologies Co., Ltd.

Parameter	Description	Remarks
Maximum feed-in current (A)		This parameter is displayed when **Capacity Limit** is set to **Current limit**.
Maximum current from grid (A)		
Shut down if feed-in current exceeds threshold	After this parameter is enabled, the array will be forcibly shut down for 4 hours if the feed-in current exceeds the threshold. You are advised to use this parameter following the UK's G100 standard. **NOTE** If the inverter shuts down because the feed-in current adjustment is not complete within the specified timeframe, the user needs to manually start the inverter. By default, the user needs to wait for at least 4 hours before manually starting the inverter.	This parameter is displayed when **Capacity Limit** is set to **Current limit**.
Array startup	Specifies the startup of devices in the array.	This parameter is displayed when **Shut down if feed-in current exceeds threshold** is enabled.

6.4 Upgrading the Inverter

NOTICE

Before upgrading the inverter, ensure that the DC side is powered on.

NOTE

Contact the Company's engineers to obtain the software package for upgrade, or log in to the **FusionSolar Software Download** website and download the latest inverter software version.

Using an App to Upgrade the Inverter

If you use an app to upgrade the inverter, see the section about device upgrade in the app device commissioning guide.

Using a SmartLogger to Upgrade the Inverter

If you use a SmartLogger to upgrade the inverter, refer to the following:

Copyright © Huawei Technologies Co., Ltd.

- Section **Device Update** in the *SmartLogger5000B User Manual*
- Section **Device Update** in the *SmartMGC5000 User Manual*
- Section **Software Upgrade** in the *SmartLogger3000 User Manual*

Using a Management System to Upgrade the Inverter

If you use a management system to upgrade the inverter, see the section about device upgrade management in the management system user manual.

 Copyright © Huawei Technologies Co., Ltd.

7 Maintenance

Prerequisites

DANGER

- Wear personal protective equipment and use dedicated insulated tools to avoid electric shocks or short circuits.

WARNING

- Before performing maintenance, power off the equipment, follow the instructions on the delayed discharge label, and wait for a period of time as specified to ensure that the equipment is not energized.

7.1 Shutdown and Power-Off

Context

WARNING

- If two inverters share the same AC switch on the AC side, power off the system of the two inverters.
- After the system is powered off, the remaining electricity and heat on the enclosure may cause electric shocks or burns. Therefore, wait for at least 15 minutes after inverter power-off and put on protective gloves before working on the inverter.

 Copyright © Huawei Technologies Co., Ltd.

Procedure

Step 1 Send a shutdown command on the app, SmartLogger, or management system.

For details, see the maintenance section in the app device commissioning guide or the user manual of the SmartLogger or management system.

Step 2 Turn off the AC switch between the inverter and the power grid.

Step 3 Set all DC switches (**DC SWITCH**) to **OFF**.

----End

7.2 Power-Off for Maintenance

Context

To prevent personal injury and equipment damage, perform the following procedure to power off the inverter for troubleshooting or replacement.

DANGER

- Do not stay in front of the inverter for a long time. Do not approach the inverter unless necessary.
- If you need to operate an inverter switch, insert or remove a USB flash drive, replace a fan, or commission the inverter, you are advised to stand beside the inverter or behind it and take safety measures in strict accordance with the requirements in the user manual.

CAUTION

- If the inverter is faulty, do not stand in front of it if possible.
- If the LED1 indicator on the inverter is off and each DC switch is set to **OFF**, do not operate any DC switch on the inverter. For details, see **Step 4**.
- Do not operate the DC switches on the inverter before you perform steps **Step 3** to **Step 5**.
- When the inverter detects a fault, it triggers automatic DC disconnection protection. Do not turn on the DC switches before the fault is rectified.
- If the AC switch between the inverter and the power grid has been turned off automatically, do not turn it on before the fault is rectified.
- Before power-off for maintenance, do not touch the energized components of the inverter. Otherwise, electric shocks or arcs may occur.

Procedure

Step 1 Wear proper PPE.

 Copyright © Huawei Technologies Co., Ltd.

Step 2 If the inverter does not shut down due to a fault, send a shutdown command on the app, SmartLogger, or management system. If the inverter has shut down due to a fault, go to the next step.

Step 3 Turn off the AC switch between the inverter and the power grid.

Step 4 Use a clamp meter to measure the DC current of each PV string input to the inverter.

- If the current is less than or equal to 0.01 A, go to the next step.
- If the current is higher than 0.01 A, wait until the solar irradiance decreases and the PV string current decreases below 0.01 A at night, and then go to the next step.

Step 5 Open the maintenance compartment door, install a support strut, and use a multimeter to check the phase voltage of the AC terminal block. Ensure that the AC side of the inverter is powered off.

Step 6 Set all DC switches of the inverter to OFF. If the DC switches are automatically turned off, go to the next step.

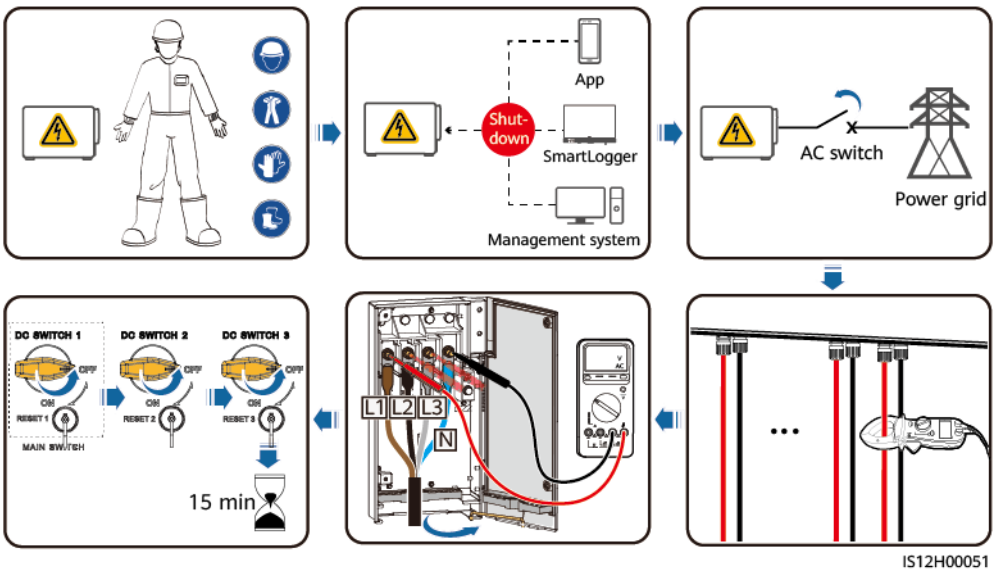

Step 7 Wait for 15 minutes and troubleshoot or repair the inverter.

Copyright © Huawei Technologies Co., Ltd.

WARNING

If a serious fault occurs in an internal circuit of the inverter, do not stay in front of the inverter. Perform operations according to the following instructions. Improper operations may cause a fire inside the inverter or allow a serious fault to propagate, which may endanger personal safety.

- If the inverter emits abnormal smell or smoke, catches fire, or has obvious exceptions, handle the situation according to the **Smart PV Inverter Emergency Plan**.
- If the inverter does not emit abnormal smell or smoke, catch fire, or have obvious exceptions:
  - If an alarm is generated, perform operations on the faulty inverter according to the **Inverter Alarm Reference**. If any of the alarms with IDs 2064-1, 2064-10, 2064-11, 2064-12, 2064-20, 2064-29, and 2064-30 is generated, handle it first.
  - If the inverter does not generate an alarm but the AC switch trips and the DC indicator on the inverter is off, follow these instructions:
    - Ensure that the AC switch is OFF. Do not turn it on again.
    - Ensure that there are no flammable materials under the inverter.
    - Handle the inverter at night when the DC side is completely de-energized.
  - In other cases, wait for the inverter to recover automatically. If the inverter fails to recover, contact your vendor or technical support.

----End

7.3 Routine Maintenance

To ensure that the inverter can operate properly for a long term, you are advised to perform routine maintenance on it as described in this section.

CAUTION

- Before cleaning the inverter, connecting cables, and checking the grounding reliability, power off the inverter and ensure that each **DC SWITCH** on the inverter is set to **OFF**.
- If you need to open the maintenance compartment door on rainy or snowy days, take protective measures to prevent rain or snow from entering the maintenance compartment. If protective measures cannot be taken, do not open the maintenance compartment door.

Copyright © Huawei Technologies Co., Ltd.

Table 7-1 Maintenance checklist

Check Item	Check Method	Maintenance Interval
Cleanness of air intake and exhaust vents, and fans	• Check whether there is dust on the air intake and exhaust vents. If necessary, remove the baffle plates from the vents and clean up dust. • Check whether the fan generates abnormal noise during operation.	Once every 6 to 12 months
System running status	• Check whether the inverter is damaged or deformed. • Check whether the inverter generates abnormal sounds during operation. • Check whether all inverter parameters are correctly set during operation.	Once every 6 months
Electrical connections	• Check whether cables are disconnected or loose. • Check whether cables are damaged, especially whether the cable sheath that contacts a metal surface is damaged. • Check whether the sealing plugs of unused DC input terminals fall off. • Unused terminals and ports are sealed by waterproof glands.	6 months after the first commissioning and once every 6 to 12 months after that
Grounding reliability	Check whether the PE cable is securely connected.	6 months after the first commissioning and once every 6 to 12 months after that
Vegetation around the inverter	• Perform inspection and weeding as required. • Clean the site promptly after weeding.	Based on the local wilting season

 Copyright © Huawei Technologies Co., Ltd.

Figure 7-1 Removing the baffle plate of the air intake vent

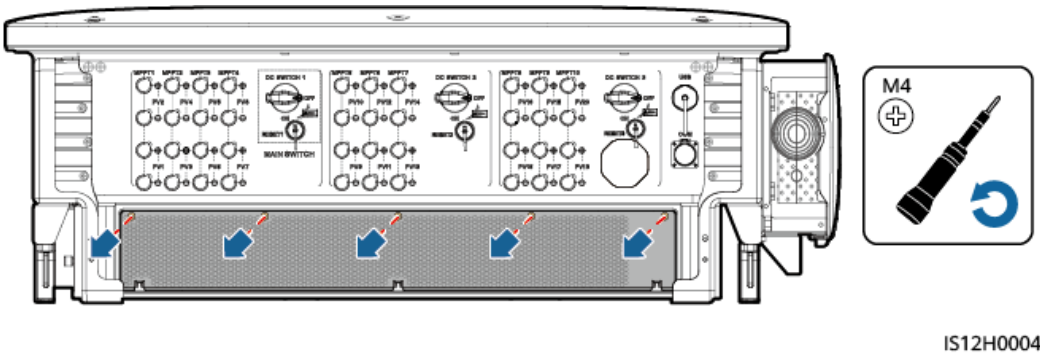

NOTICE

After the cleaning is complete, reinstall the baffle plate. Tighten the screws with a torque of 1.2 N·m.

7.4 Alarm Reference

For details about alarms, see **Inverter Alarm Reference**.

7.5 Replacing a Fan

CAUTION

- Before replacing a fan, power off the inverter.
- When replacing a fan, use insulated tools and wear PPE.

NOTE

If the fan gets stuck when being pulled or pushed, slightly lift it.

Step 1 Remove the screws from the fan tray and store them properly. Pull out the fan tray until the fan tray is flush with the inverter enclosure.

Figure 7-2 Pulling out the fan tray (1)

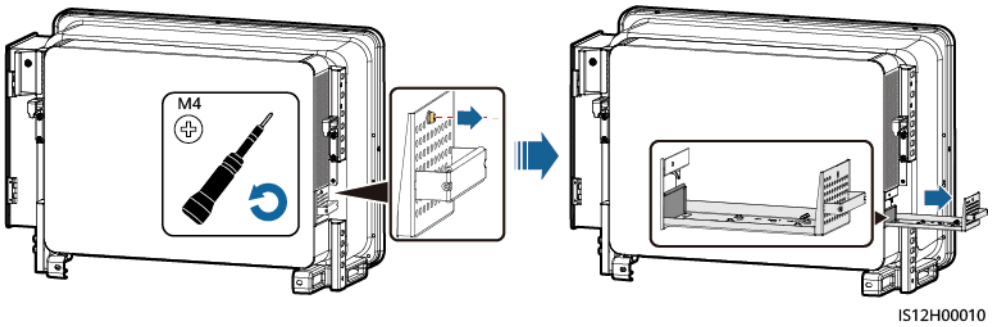

Copyright © Huawei Technologies Co., Ltd.

Step 2 Remove the cable ties shared by the cables, unscrew the connectors, and disconnect the cables.

Figure 7-3 Disconnecting cables

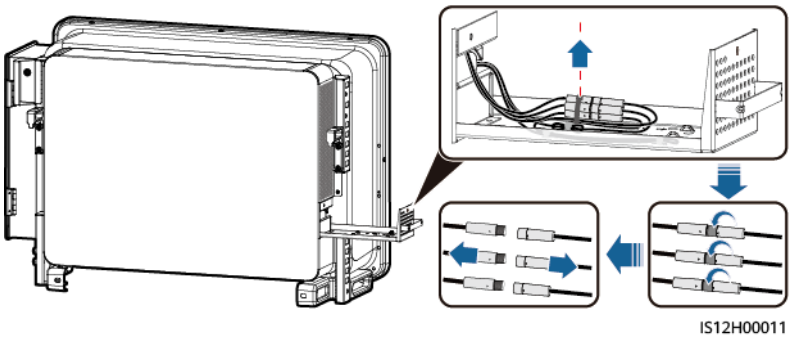

Step 3 Pull out the fan tray completely.

Figure 7-4 Pulling out the fan tray (2)

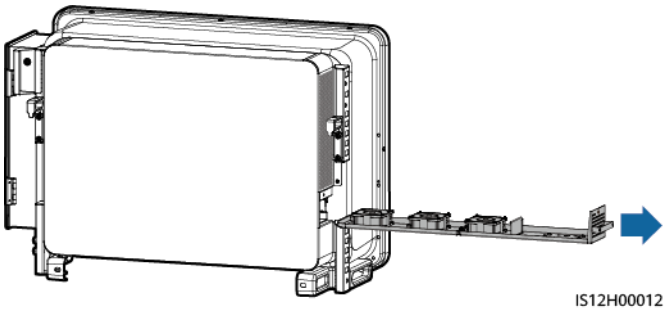

Step 4 Remove cable ties of the faulty fan.

- FAN 1 is faulty.

Figure 7-5 Removing cable ties from FAN 1

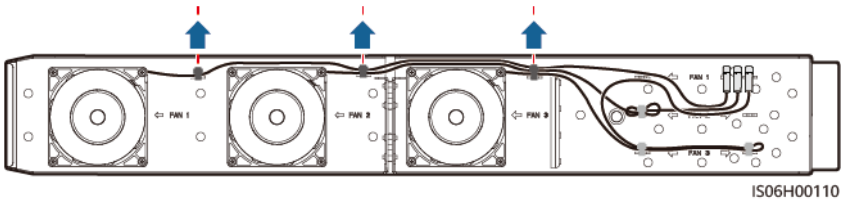

- FAN 2 is faulty.

Figure 7-6 Removing cable ties from FAN 2

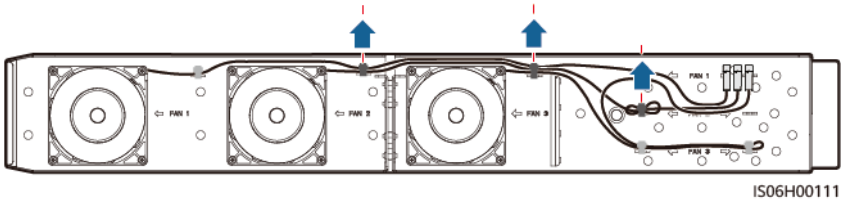

- FAN 3 is faulty.

Copyright © Huawei Technologies Co., Ltd.

Figure 7-7 Removing cable ties from FAN 3

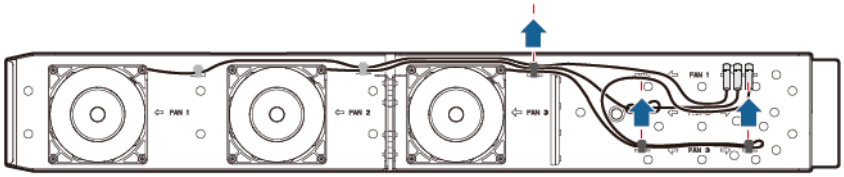

Step 5 Remove the faulty fan (FAN 1 is used as an example).

Figure 7-8 Removing a fan

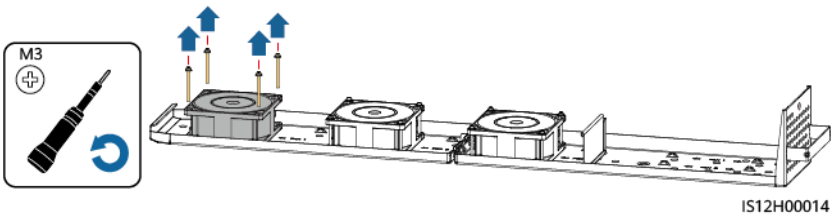

Step 6 Install a new fan (FAN 1 is used as an example).

Figure 7-9 Installing a fan

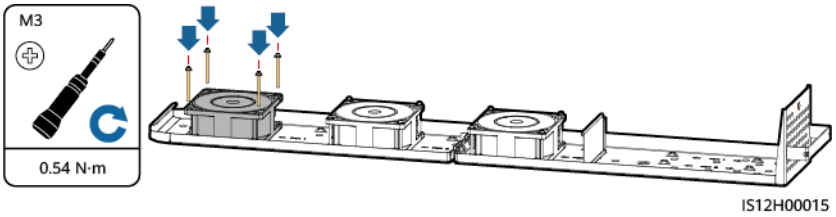

Step 7 Bind the fan cables.

- Binding positions for FAN 1

Figure 7-10 Binding the cables of FAN 1

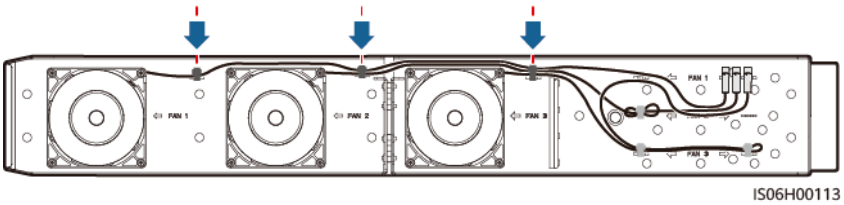

- Binding positions for FAN 2

Figure 7-11 Binding the cables of FAN 2

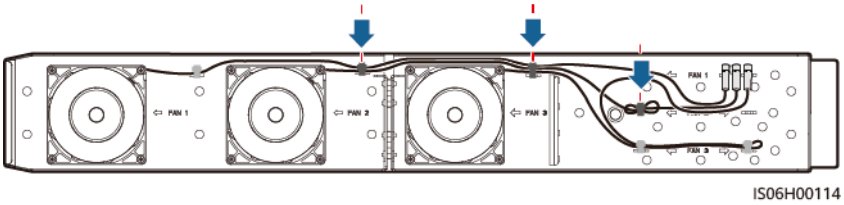

- Binding positions for FAN 3

Copyright © Huawei Technologies Co., Ltd.

Figure 7-12 Binding the cables of FAN 3

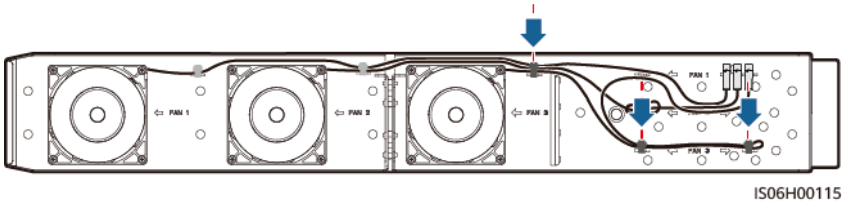

Step 8 Push in the fan tray until the fan baffle plate is flush with the inverter enclosure.

Figure 7-13 Pushing in the fan tray

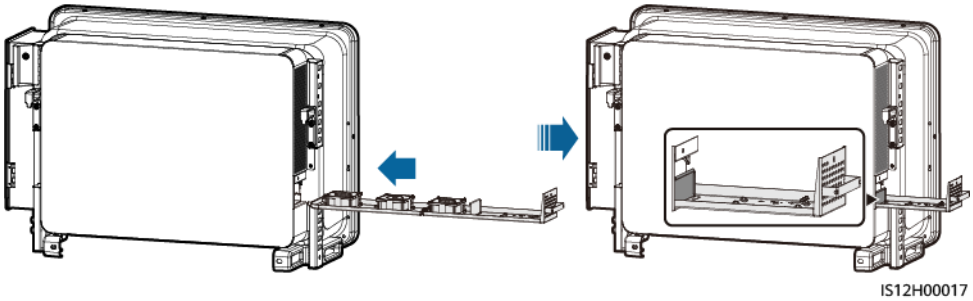

Step 9 Connect the cables correctly according to the cable labels and bind the cables.

Figure 7-14 Binding cables

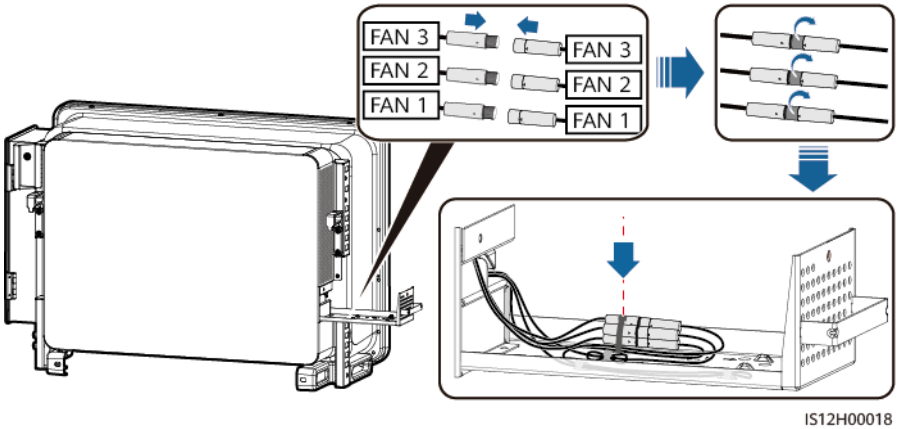

Step 10 Push the fan tray into the slot and tighten the screw.

Figure 7-15 Reinstalling the fan tray

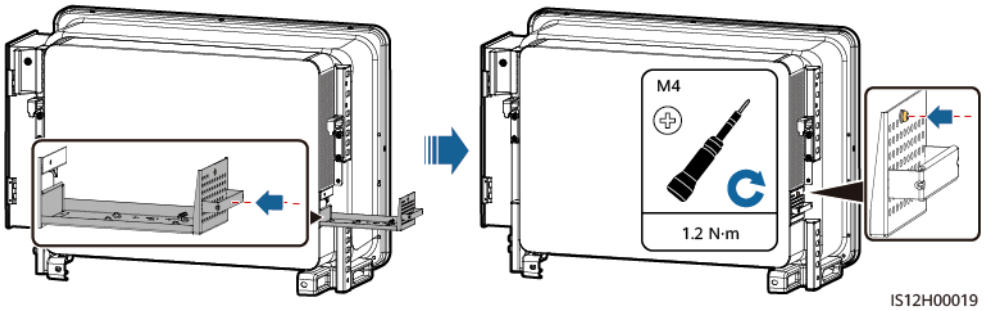

----End

Copyright © Huawei Technologies Co., Ltd.

7.6 Resetting and Turning On the DC Switch

Prerequisites

If an internal inverter fault is displayed on the mobile app or remote monitoring system and the DC switch is OFF, the DC switch of the inverter has been automatically turned off. In this case, rectify the fault based on the alarm handling suggestions before turning on the DC switch.

Procedure

Step 1 Loosen the nuts on the RESET buttons under the three DC switches, and press the RESET buttons inwards until they cannot go further.

Step 2 Set the DC SWITCH to ON.

Step 3 Tighten the nuts of the RESET buttons.

Figure 7-16 Resetting and turning on a DC switch (DC SWITCH 1 is used as an example)

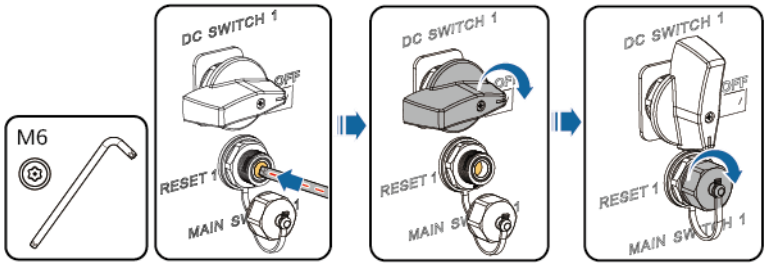

IS13H00022

----End

Copyright © Huawei Technologies Co., Ltd.

8 Handling the Inverter

8.1 Removing the SUN2000

NOTICE

Before removing the SUN2000, disconnect both AC and DC connections.

Perform the following operations to remove the SUN2000:

1. Disconnect all cables from the SUN2000, including RS485 communications cables, DC input power cables, AC output power cables, and PGND cables.
2. Remove the SUN2000 from the mounting bracket.
3. Remove the mounting bracket.

8.2 Packing the SUN2000

- If the original packing materials are available, put the SUN2000 inside them and then seal them by using adhesive tape.
- If the original packing materials are not available, put the SUN2000 inside a suitable cardboard box and seal it properly.

8.3 Disposing of the SUN2000

If the SUN2000 service life expires, dispose of it according to the local disposal rules for electrical equipment waste.

 Copyright © Huawei Technologies Co., Ltd.

9 Technical Specifications

Efficiency

Item	SUN2000-115 KTL-M2	SUN2000-110 KTL-M2	SUN2000-100 KTL-M2	SUN2000-100 KTL-M2 (Chinese mainland)	SUN2000-75K TL-M1
Maximum efficiency	≥ 98.6% (400 V) and ≥ 98.8% (480 V)	≥ 98.6% (380 V)	≥ 98.6% (380 V/400 V) and ≥ 98.8% (480 V)	≥ 98.6% (380 V)	≥ 98.6% (380 V)
Efficiency in China	-	98.1% (380 V)	-	98.1% (380 V)	-
European efficiency	≥ 98.4% (400 V) and ≥ 98.6% (480 V)	-	≥ 98.4% (380 V/400 V) and ≥ 98.6% (480 V)	-	≥ 98.3% (380 V)

Input

Item	SUN2000-115 KTL-M2	SUN2000-110 KTL-M2	SUN2000-100 KTL-M2	SUN2000-100 KTL-M2 (Chinese mainland)	SUN2000-75K TL-M1
Maximum input voltage[a]	1100 V	1100 V	1100 V	1100 V	1100 V
Operating voltage range[b]	200–1000 V				

 Copyright © Huawei Technologies Co., Ltd.

Item	SUN2000-115 KTL-M2	SUN2000-110 KTL-M2	SUN2000-100 KTL-M2	SUN2000-100 KTL-M2 (Chinese mainland)	SUN2000-75K TL-M1
Minimum startup voltage	200 V				
Full-load MPPT voltage range[c]	540–800 V (400 V) and 625–850 V (480 V)	540–800 V (380 V)	540–800 V (380 V/400 V) and 625–850 V (480 V)	540–800 V (380 V)	540–800 V (380 V)
Rated input voltage	600 V (400 V) and 720 V (480 V)	600 V (380 V)	600 V (380 V/400 V) and 720 V (480 V)	600 V (380 V)	600 V (380 V)
Maximum input current per MPPT	30 A				26 A
Maximum input current per string	20 A	20 A	20 A	20 A	20 A
Maximum short-circuit current (per MPPT)	40 A				
Maximum backfeed current to the PV array	0 A				
Number of inputs	20				
Number of MPPT circuits	10				
Note a: The maximum input voltage is the maximum DC input voltage that the inverter can withstand. If the input voltage exceeds this value, the inverter may be damaged. Note b: If the input voltage is beyond the operating voltage range, the inverter cannot work properly. Note c: The PV strings connecting to the same MPPT circuit shall use the same model and quantity of PV modules. It is recommended that the PV string voltage be higher than the lower threshold of the full-load MPPT voltage.					

 Copyright © Huawei Technologies Co., Ltd.

Output

Item	SUN2000-115 KTL-M2	SUN2000-110 KTL-M2	SUN2000-100 KTL-M2	SUN2000-100 KTL-M2 (Chinese mainland)	SUN2000-75K TL-M1
Rated active power	115 kW	110 kW	100 kW	100 kW	75 kW
Maximum apparent power	125 kVA	121 kVA	110 kVA	110 kVA	75 kVA
Maximum active power (cosϕ = 1)	125 kW	121 kW	110 kW	110 kW	75 kW
Rated output voltage[a] (phase voltage/line voltage)	230 V/400 V, 277 V/480 V 3W + (N)[b] + PE	220 V/380 V 3W + (N)[b] + PE	220 V/380 V, 230 V/400 V, and 277 V/480 V 3W + (N)[b] + PE	220 V/380 V 3W + (N)[b] + PE	220/380 V, 3W + (N)[b] + PE
Rated output current	166.0 A (400 V) and 138.4 A (480 V)	167.2 A (380 V)	152.0 A (380 V), 144.4 A (400 V), and 120.3 A (480 V)	152.0 A (380 V)	113.60 A (380 V)
Supported power grid frequency	50 Hz/60 Hz	50 Hz/60 Hz	50 Hz/60 Hz	50 Hz/60 Hz	60 Hz
Maximum output current	182.3 A (400 V), 151.9 A (480 V)	185.7 A (380 V)	168.8 A (380 V), 160.4 A (400 V), and 133.7 A (480 V)	168.8 A (380 V)	113.60 A (380 V)
Power factor	0.8 leading to 0.8 lagging				
Maximum total harmonic distortion (rated power)	< 3%				

Note a: The rated output voltage is determined by **Grid code**, which can be set on the app, SmartLogger, or management system.

Note b: You can determine whether to connect the N wire to the inverter based on the application scenario. In scenarios without N wires, set **Output mode** to **Three-phase three-wire**. In scenarios with N wires, set **Output mode** to **Three-phase four-wire**.

 Copyright © Huawei Technologies Co., Ltd.

Protection

Item	SUN2000-115 KTL-M2	SUN2000-110 KTL-M2	SUN2000-100 KTL-M2	SUN2000-100 KTL-M2 (Chinese mainland)	SUN2000-75K TL-M1
AFCI	-	-	Supported	Supported	Supported
Input DC switch	Supported				
Anti-islanding protection	Supported				
Output overcurrent protection	Supported				
Input reverse connection protection	Supported				
PV string fault detection	Supported				
DC surge protection	Type II/Type I[a] (optional)	Type II	Type II/Type I[a] (optional)	Type II	Type II
AC surge protection	Type II				
Insulation resistance detection	Supported				
Residual current monitoring unit (RCMU)	Supported				
Overvoltage category	PV II/AC III				
Note a: The SPD complies with IEC/EN 61643-11 and IEC/EN 61643-31.					

 Copyright © Huawei Technologies Co., Ltd.

Display and Communication

Item	SUN2000-115 KTL-M2	SUN2000-110 KTL-M2	SUN2000-100 KTL-M2	SUN2000-100 KTL-M2 (Chinese mainland)	SUN2000-75K TL-M1
Display	LED indicator; USB data cable + App				
Communications	MBUS/RS485	MBUS[1]/ RS485	MBUS/RS485	MBUS/RS485	MBUS/RS485
Note [1]: The device with the BOM number 01074695-045 does not support MBUS communication.					

General Specifications

Item	SUN2000-115 KTL-M2	SUN2000-110 KTL-M2	SUN2000-100 KTL-M2	SUN2000-100 KTL-M2 (Chinese mainland)	SUN2000-75K TL-M1
Dimensions (W x H x D)	1035 mm x 700 mm x 365 mm				
Net weight	≤ 93 kg				
Operating ambient temperature	–25°C to +60°C				
Cooling mode	Smart air cooling				
Maximum operating altitude	0–5000 m (derated when the altitude is greater than 4000 m)				
Relative humidity	0%–100% RH				
Input terminal[1]	Amphenol Helios H4				
Output terminal	OT+waterproof terminal				
IP rating	IP66				
Topology	Transformerless				
Note [1]: The devices with certain BOM numbers use Staubli MC4 connectors.					

 Copyright © Huawei Technologies Co., Ltd.

NOTE

Equipment complying with IEC 61000-3-12

A Grid Codes

NOTE

The grid codes are subject to change. The listed codes are for reference only.

Set the correct grid code based on the application area and scenario of the inverter.

No.	Grid Code	Description (Country/ Region/ Standard/ Others)	SUN2000-115KTL-M2	SUN2000-110KTL-M2	SUN2000-100KTL-M2	SUN2000-75KTL-M1
1	VDE-AR-N-4105	Germany low-voltage power grid	Supported	-	Supported	-
2	NB/T 32004	China low-voltage power grid	-	Supported	Supported	-
3	UTE C 15-712-1(A)	France mainland power grid	Supported	-	Supported	-
4	UTE C 15-712-1(B)	France island power grid	Supported	-	Supported	-
5	UTE C 15-712-1(C)	France island power grid	Supported	-	Supported	-
6	VDE 0126-1-1-BU	Bulgaria power grid	Supported	-	Supported	-
7	VDE 0126-1-1-GR(A)	Greece mainland power grid	Supported	-	Supported	-

 Copyright © Huawei Technologies Co., Ltd.

No.	Grid Code	Description (Country/ Region/ Standard/ Others)	SUN2000-115KTL-M2	SUN2000-110KTL-M2	SUN2000-100KTL-M2	SUN2000-75KTL-M1
8	VDE 0126-1-1-GR(B)	Greece island power grid	Supported	-	Supported	-
9	BDEW-MV	Germany medium-voltage power grid	Supported	-	Supported	-
10	G59-England	England 230 V power grid (I > 16 A)	Supported	-	Supported	-
11	G59-Scotland	Scotland 240 V power grid (I > 16 A)	Supported	-	Supported	-
12	G83-England	England 230 V power grid (I < 16 A)	Supported	-	Supported	-
13	G83-Scotland	Scotland 240 V power grid (I < 16 A)	Supported	-	Supported	-
14	CEI0-21	Italy power grid	Supported	-	Supported	-
15	EN50438-CZ	Czech Republic power grid	Supported	-	Supported	-
16	CZECH-EN50549-LV230	Czech Republic power grid	Supported	-	Supported	-
17	CZECH-EN50549-MV480	Czech Republic power grid	Supported	-	Supported	-
18	RD1699/661	Spain low-voltage power grid	Supported	-	Supported	-
19	RD1699/661-MV480	Spain medium-voltage power grid	Supported	-	Supported	-

 Copyright © Huawei Technologies Co., Ltd.

No.	Grid Code	Description (Country/ Region/ Standard/ Others)	SUN2000-115KTL-M2	SUN2000-110KTL-M2	SUN2000-100KTL-M2	SUN2000-75KTL-M1
20	EN50438-NL	Netherlands power grid	Supported	-	Supported	-
21	C10/11	Belgium power grid	Supported	-	Supported	-
22	AS4777	Australia power grid	Supported	-	Supported	-
23	IEC61727	IEC 61727 low-voltage power grid (50 Hz)	Supported	-	Supported	-
24	Custom (50 Hz)	Reserved	Supported	Supported	Supported	-
25	Custom (60 Hz)	Reserved	Supported	Supported	Supported	-
26	CEI0-16	Italy power grid	Supported	-	Supported	-
27	CHINA-MV	China medium-voltage power grid	Supported	Supported	Supported	-
28	TAI-PEA	Thailand PEA power grid	Supported	-	Supported	-
29	TAI-MEA	Thailand MEA power grid	Supported	-	Supported	-
30	BDEW-MV480	Germany medium-voltage power grid	Supported	-	Supported	-
31	Custom MV480 (50 Hz)	Reserved	Supported	-	Supported	-
32	Custom MV480 (60 Hz)	Reserved	Supported	-	Supported	-

 Copyright © Huawei Technologies Co., Ltd.

No.	Grid Code	Description (Country/ Region/ Standard/ Others)	SUN2000-115KTL-M2	SUN2000-110KTL-M2	SUN2000-100KTL-M2	SUN2000-75KTL-M1
33	G59-England-MV480	UK 480 V medium-voltage power grid (I > 16 A)	Supported	-	Supported	-
34	IEC61727-MV480	IEC 61727 medium-voltage power grid (50 Hz)	Supported	-	Supported	-
35	UTE C 15-712-1-MV480	France island power grid	Supported	-	Supported	-
36	TAI-PEA-MV480	Thailand PEA medium-voltage power grid	Supported	-	Supported	-
37	TAI-MEA-MV480	Thailand MEA medium-voltage power grid	Supported	-	Supported	-
38	EN50438-DK-MV480	Denmark medium-voltage power grid	Supported	-	Supported	-
39	EN50438-TR-MV480	Türkiye medium-voltage power grid	Supported	-	Supported	-
40	EN50438-TR	Türkiye low-voltage power grid	Supported	-	Supported	-
41	C11/C10-MV480	Belgium medium-voltage power grid	Supported	-	Supported	-
42	Philippines	Philippines low-voltage power grid	Supported	-	Supported	-

 Copyright © Huawei Technologies Co., Ltd.

No.	Grid Code	Description (Country/ Region/ Standard/ Others)	SUN2000-115KTL-M2	SUN2000-110KTL-M2	SUN2000-100KTL-M2	SUN2000-75KTL-M1
43	Philippines-MV480	Philippines medium-voltage power grid	Supported	-	Supported	-
44	AS4777-MV480	Australia medium-voltage power grid	Supported	-	Supported	-
45	NRS-097-2-1	South Africa power grid	Supported	-	Supported	-
46	NRS-097-2-1-MV480	South Africa medium-voltage power grid	Supported	-	Supported	-
47	KOREA	South Korea power grid	Supported	Supported	Supported	-
48	IEC61727-60 Hz	IEC 61727 low-voltage power grid (60 Hz)	Supported	-	Supported	-
49	IEC61727-60 Hz-MV480	IEC 61727 medium-voltage power grid (60 Hz)	Supported	-	Supported	-
50	CHINA_MV500	China medium-voltage power grid	-	-	Supported	-
51	ANRE	Romania low-voltage power grid	Supported	-	Supported	-
52	ANRE-MV480	Romania medium-voltage power grid	Supported	-	Supported	-

 Copyright © Huawei Technologies Co., Ltd.

No.	Grid Code	Description (Country/ Region/ Standard/ Others)	SUN2000-115KTL-M2	SUN2000-110KTL-M2	SUN2000-100KTL-M2	SUN2000-75KTL-M1
53	PO12.3-MV480	Spain medium-voltage power grid	Supported	-	Supported	-
54	EN50438_IE-MV480	Ireland medium-voltage power grid	Supported	-	Supported	-
55	EN50438_IE	Ireland low-voltage power grid	Supported	-	Supported	-
56	CEI0-16-MV480	Italy medium-voltage power grid	Supported	-	Supported	-
57	PO12.3	Spain low-voltage power grid	Supported	-	Supported	-
58	CEI0-21-MV480	Italy medium-voltage power grid	Supported	-	Supported	-
59	KOREA-MV480	South Korea medium-voltage power grid	Supported	-	Supported	-
60	Egypt ETEC	Egypt low-voltage power grid	Supported	-	Supported	-
61	Egypt ETEC-MV480	Egypt medium-voltage power grid	Supported	-	Supported	-
62	EN50549-LV	Ireland power grid	Supported	-	Supported	-
63	EN50549-MV480	Ireland medium-voltage power grid	Supported	-	Supported	-

 Copyright © Huawei Technologies Co., Ltd.

No.	Grid Code	Description (Country/ Region/ Standard/ Others)	SUN2000-115KTL-M2	SUN2000-110KTL-M2	SUN2000-100KTL-M2	SUN2000-75KTL-M1
64	Jordan-Transmission	Jordan low-voltage power grid	Supported	-	Supported	-
65	Jordan-Transmission-MV480	Jordan medium-voltage power grid	Supported	-	Supported	-
66	NAMIBIA	Namibia power grid	Supported	-	Supported	-
67	ABNT NBR 16149	Brazil power grid	Supported	-	Supported	Supported
68	ABNT NBR 16149-MV480	Brazil medium-voltage power grid	Supported	-	Supported	Supported
69	BRAZIL-P140-LV220	Brazil P140 power grid	-	-	-	Supported
70	BRAZIL-P140-480	Brazil P140 power grid	-	-	-	Supported
71	SA_RPPs	South Africa low-voltage power grid	Supported	-	Supported	-
72	SA_RPPs-MV480	South Africa medium-voltage power grid	Supported	-	Supported	-
73	ZAMBIA	Zambia low-voltage power grid	Supported	-	Supported	-
74	ZAMBIA-MV480	Zambia medium-voltage power grid	Supported	-	Supported	-
75	Chile	Chile low-voltage power grid	Supported	-	Supported	-

Copyright © Huawei Technologies Co., Ltd.

No.	Grid Code	Description (Country/ Region/ Standard/ Others)	SUN2000-115KTL-M2	SUN2000-110KTL-M2	SUN2000-100KTL-M2	SUN2000-75KTL-M1
76	Chile-MV480	Chile medium-voltage power grid	Supported	-	Supported	-
77	Mexico-MV480	Mexico medium-voltage power grid	Supported	-	Supported	-
78	Malaysian	Malaysia low-voltage power grid	Supported	-	Supported	-
79	Malaysian-MV480	Malaysia medium-voltage power grid	Supported	-	Supported	-
80	KENYA_ETHIOPIA	Kenya low-voltage power grid and Ethiopia power grid	Supported	-	Supported	-
81	KENYA_ETHIOPIA-MV480	Kenya low-voltage power grid and Ethiopia medium-voltage power grid	Supported	-	Supported	-
82	NIGERIA	Nigeria low-voltage power grid	Supported	-	Supported	-
83	NIGERIA-MV480	Nigeria medium-voltage power grid	Supported	-	Supported	-
84	DUBAI	Dubai low-voltage power grid	Supported	-	Supported	-

 Copyright © Huawei Technologies Co., Ltd.

No.	Grid Code	Description (Country/ Region/ Standard/ Others)	SUN2000-115KTL-M2	SUN2000-110KTL-M2	SUN2000-100KTL-M2	SUN2000-75KTL-M1
85	DUBAI-MV480	Dubai medium-voltage power grid	Supported	-	Supported	-
86	Northern Ireland	Northern Ireland low-voltage power grid	Supported	-	Supported	-
87	Northern Ireland-MV480	Northern Ireland medium-voltage power grid	Supported	-	Supported	-
88	Cameroon	Cameroon low-voltage power grid	Supported	-	Supported	-
89	Cameroon-MV480	Cameroon medium-voltage power grid	Supported	-	Supported	-
90	Jordan-Distribution	Jordan power distribution network low-voltage power grid	Supported	-	Supported	-
91	Jordan-Distribution-MV480	Jordan power distribution network medium-voltage power grid	Supported	-	Supported	-
92	NAMIBIA_MV480	Namibia power grid	Supported	-	Supported	-
93	LEBANON	Lebanon low-voltage power grid	Supported	-	Supported	-

 Copyright © Huawei Technologies Co., Ltd.

No.	Grid Code	Description (Country/ Region/ Standard/ Others)	SUN2000-115KTL-M2	SUN2000-110KTL-M2	SUN2000-100KTL-M2	SUN2000-75KTL-M1
94	LEBANON-MV480	Lebanon medium-voltage power grid	Supported	-	Supported	-
95	ARGENTINA-MV500	Argentina medium-voltage power grid	Supported	-	Supported	-
96	Jordan-Transmission-HV	Jordan high-voltage power grid	Supported	-	Supported	-
97	Jordan-Transmission-HV480	Jordan high-voltage power grid	Supported	-	Supported	-
98	TUNISIA	Tunisia power grid	Supported	-	Supported	-
99	TUNISIA-MV480	Tunisia medium-voltage power grid	Supported	-	Supported	-
100	AUSTRALIA-NER	Australia NER standard power grid	Supported	-	Supported	-
101	AUSTRALIA-NER-MV480	Australia NER standard power grid	Supported	-	Supported	-
102	SAUDI	Saudi Arabia power grid	Supported	-	Supported	-
103	SAUDI-MV480	Saudi Arabia power grid	Supported	-	Supported	-
104	Ghana-MV480	Ghana medium-voltage power grid	Supported	-	Supported	-
105	Chile-PMGD	Chile PMGD power grid	Supported	-	Supported	-

 Copyright © Huawei Technologies Co., Ltd.

No.	Grid Code	Description (Country/ Region/ Standard/ Others)	SUN2000-115KTL-M2	SUN2000-110KTL-M2	SUN2000-100KTL-M2	SUN2000-75KTL-M1
106	Chile-PMGD-MV480	Chile PMGD power grid	Supported	-	Supported	-
107	VDE-AR-N4120-HV	VDE 4120 standard power grid	Supported	-	Supported	-
108	VDE-AR-N4120-HV480	VDE 4120 standard power grid	Supported	-	Supported	-
109	Vietnam	Vietnam power grid	Supported	-	Supported	-
110	Vietnam-MV480	Vietnam power grid	Supported	-	Supported	-
111	TAIPOWER	Taiwan Power low-voltage power grid	Supported	-	Supported	-
112	TAIPOWER-MV480	Taiwan Power medium-voltage power grid	Supported	-	Supported	-
113	ARGENTINA-MV480	Argentina medium-voltage power grid	Supported	-	Supported	-
114	OMAN	Oman low-voltage power grid	Supported	-	Supported	-
115	OMAN-MV480	Oman medium-voltage power grid	Supported	-	Supported	-
116	KUWAIT	Kuwait low-voltage power grid	Supported	-	Supported	-
117	KUWAIT-MV480	Kuwait medium-voltage power grid	Supported	-	Supported	-

 Copyright © Huawei Technologies Co., Ltd.

No.	Grid Code	Description (Country/ Region/ Standard/ Others)	SUN2000-115KTL-M2	SUN2000-110KTL-M2	SUN2000-100KTL-M2	SUN2000-75KTL-M1
118	BANGLADESH	Bangladesh low-voltage power grid	Supported	-	Supported	-
119	BANGLADESH-MV480	Bangladesh medium-voltage power grid	Supported	-	Supported	-
120	Chile-Net_Billing	Chile Net Billing power grid	Supported	-	Supported	-
121	EN50438-NL-MV480	Netherlands medium-voltage power grid	Supported	-	Supported	-
122	BAHRAIN	Bahrain low-voltage power grid	Supported	-	Supported	-
123	BAHRAIN-MV480	Bahrain medium-voltage power grid	Supported	-	Supported	-
124	Fuel_Engine_Grid	Genset hybrid power grid	Supported	Supported	Supported	-
125	Fuel-Engine-Grid-60Hz	Genset hybrid power grid	Supported	Supported	Supported	-
126	ARGENTINA	Argentina power grid	Supported	-	Supported	-
127	Mauritius	Mauritius power grid	Supported	-	Supported	-
128	Mauritius-MV480	Mauritius medium-voltage power grid	Supported	-	Supported	-
129	EN50438-SE	Sweden low-voltage power grid	Supported	-	Supported	-

 Copyright © Huawei Technologies Co., Ltd.

No.	Grid Code	Description (Country/ Region/ Standard/ Others)	SUN2000-115KTL-M2	SUN2000-110KTL-M2	SUN2000-100KTL-M2	SUN2000-75KTL-M1
130	Pakistan	Pakistan power grid	Supported	-	Supported	-
131	Pakistan-MV480	Pakistan medium-voltage power grid	Supported	-	Supported	-
132	Austria	Austria power grid	Supported	-	Supported	-
133	Austria-MV480	Austria medium-voltage power grid	Supported	-	Supported	-
134	AUSTRIA-MV400-50Hz	Austria power grid	Supported	-	Supported	-
135	G99-TYPEA-LV	UK G99-TYPEA-LV power grid	Supported	-	Supported	-
136	G99-TYPEB-LV	UK G99-TYPEB-LV power grid	Supported	-	Supported	-
137	G99-TYPEB-HV	UK G99-TYPEB-HV power grid	Supported	-	Supported	-
138	G99-TYPEB-HV-MV480	UK G99-TYPEB-HV medium-voltage power grid	Supported	-	Supported	-
139	G99-TYPEA-HV	UK G99-TYPEA-HV power grid	Supported	-	Supported	-
140	EN50549-MV400	Ireland power grid	Supported	-	Supported	-
141	VDE-AR-N4110	Germany medium-voltage power grid	Supported	-	Supported	-

 Copyright © Huawei Technologies Co., Ltd.

No.	Grid Code	Description (Country/ Region/ Standard/ Others)	SUN2000-115KTL-M2	SUN2000-110KTL-M2	SUN2000-100KTL-M2	SUN2000-75KTL-M1
142	VDE-AR-N4110-MV480	Germany medium-voltage power grid	Supported	-	Supported	-
143	NTS	Spain power grid	Supported	-	Supported	-
144	NTS-MV480	Spain medium-voltage power grid	Supported	-	Supported	-
145	SINGAPORE	Singapore low-voltage power grid	Supported	-	Supported	-
146	SINGAPORE-MV480	Singapore medium-voltage power grid	Supported	-	Supported	-
147	HONGKONG	Hong Kong low-voltage power grid	Supported	-	Supported	-
148	HONGKONG-MV480	Hong Kong medium-voltage power grid	Supported	-	Supported	-
149	C10/11-MV400	Belgium medium-voltage power grid	Supported	-	Supported	-
150	Cambodia	Cambodia power grid	Supported	-	Supported	-
151	Cambodia-MV480	Cambodia medium-voltage power grid	Supported	-	Supported	-
152	EN50549-SE	Sweden low-voltage power grid	Supported	-	Supported	-

 Copyright © Huawei Technologies Co., Ltd.

No.	Grid Code	Description (Country/ Region/ Standard/ Others)	SUN2000-115KTL-M2	SUN2000-110KTL-M2	SUN2000-100KTL-M2	SUN2000-75KTL-M1
153	GREG030	Colombia low-voltage power grid	Supported	-	Supported	-
154	GREG030-MV440	Colombia medium-voltage power grid	Supported	-	Supported	-
155	GREG030-MV480	Colombia medium-voltage power grid	Supported	-	Supported	-
156	PORTUGAL	Portugal low-voltage power grid	Supported	-	Supported	-
157	PORTUGAL-MV480	Portugal medium-voltage power grid	Supported	-	Supported	-
158	AS4777_ACT	Australia power grid	Supported	-	Supported	-
159	AS4777_NSW_ESS	Australia power grid	Supported	-	Supported	-
160	AS4777_NSW_AG	Australia power grid	Supported	-	Supported	-
161	AS4777_QLD	Australia power grid	Supported	-	Supported	-
162	AS4777_SA	Australia power grid	Supported	-	Supported	-
163	AS4777_VIC	Australia power grid	Supported	-	Supported	-
164	EN50549-PL	Poland power grid	Supported	-	Supported	-
165	DANMARK-EN50549-DK1-LV230	Denmark power grid	Supported	-	Supported	-

 Copyright © Huawei Technologies Co., Ltd.

No.	Grid Code	Description (Country/ Region/ Standard/ Others)	SUN2000-115KTL-M2	SUN2000-110KTL-M2	SUN2000-100KTL-M2	SUN2000-75KTL-M1
166	DANMARK-EN50549-DK2-LV230	Denmark power grid	Supported	-	Supported	-
167	AUSTRALIA-AS4777_A-LV230	Australia power grid	Supported	-	Supported	-
168	AUSTRALIA-AS4777_B-LV230	Australia power grid	Supported	-	Supported	-
169	AUSTRALIA-AS4777_C-LV230	Australia power grid	Supported	-	Supported	-
170	AUSTRALIA-AS4777_NZ-LV230	Australia power grid	Supported	-	Supported	-
171	INVALID GRID CODE	Invalid grid code	Supported	-	Supported	-
172	Israel	Israel power grid	Supported	-	Supported	-
173	Israel-MV400	Israel power grid	Supported	-	Supported	-
174	Israel-MV480	Israel power grid	Supported	-	Supported	-
175	AUSTRIA-TYPEB-LV400	Austria power grid	Supported	-	Supported	-
176	AUSTRIA-TYPEB-LV480	Austria power grid	Supported	-	Supported	-
177	AUSTRIA-TYPEB-MV400	Austria power grid	Supported	-	Supported	-
178	AUSTRIA-TYPEB-MV480	Austria power grid	Supported	-	Supported	-
179	FILAND-EN50549-LV230	Finland power grid	Supported	-	Supported	-

 Copyright © Huawei Technologies Co., Ltd.

No.	Grid Code	Description (Country/ Region/ Standard/ Others)	SUN2000-115KTL-M2	SUN2000-110KTL-M2	SUN2000-100KTL-M2	SUN2000-75KTL-M1
180	ANRE-TYPEB	Romania power grid (type B)	Supported	-	Supported	-
181	ANRE-TYPEB-MV480	Romania power grid (type B)	Supported	-	Supported	-
182	CHINA-GBT29319-LV220	China power grid	-	Supported	Supported	-
183	SWITZERLAND-LV230	Switzerland power grid	Supported	-	Supported	-
184	FRANCE-EN50549-230	France FD C11-519-11	Supported	-	Supported	-
185	AUSTRIA-TYPEC-MV-400	Austria power grid	Supported	-	Supported	-
186	G99/NI-TYPEB-230	Northern Ireland G99/NI Type B	Supported	-	Supported	-
187	G99/NI-TYPEC-230	Northern Ireland G99/NI Type C	Supported	-	Supported	-
188	G99/NI-TYPED-230	Northern Ireland G99/NI Type D	Supported	-	Supported	-
189	CZECH-EN50549-B1/B2-230	Czech Republic power grid (B1/B2)	Supported	-	Supported	-
190	SRI LANKA-230	Sri Lanka power grid	Supported	Supported	Supported	-
191	FRANCE-EN50549-519/12-230	France FD C11-519-12	Supported	-	Supported	-

 Copyright © Huawei Technologies Co., Ltd.

No.	Grid Code	Description (Country/ Region/ Standard/ Others)	SUN2000-115KTL-M2	SUN2000-110KTL-M2	SUN2000-100KTL-M2	SUN2000-75KTL-M1
192	IEC61727-50Hz-420	IEC 61727 standard	Supported	Supported	Supported	-
193	IEC61727-50Hz-440	IEC 61728 standard	Supported	Supported	Supported	-
194	IEC61727-60Hz-420	IEC 61729 standard	Supported	Supported	Supported	-
195	IEC61727-60Hz-440	IEC 61730 standard	Supported	Supported	Supported	-
196	SA-RPPS-220	South Africa power grid	-	-	Supported	-
197	CHILE-Net_Billing-MV-220	Chile medium-voltage power grid	Supported	-	Supported	-

 Copyright © Huawei Technologies Co., Ltd.

B Resetting a Password

B.1 Power-On and Power-Off

Step 1 Check that the AC and DC sides of the inverter are both powered on, and indicators and are steady green or blinking slowly for more than 3 minutes.

Step 2 Turn off the AC switch, set the **DC SWITCH** on the inverter to **OFF**, and wait until all LED indicators on the inverter panel are off.

Step 3 After the inverter is powered off, complete the following operations within 4 minutes:

1. Turn on the AC switch and wait about 90s or until the inverter indicator blinks.
2. Turn off the AC switch and wait about 30s or until all LED indicators on the inverter panel are off.
3. Turn on the AC switch and wait about 90s or until the inverter indicator blinks.

Step 4 Log in to the app and reset the password within 10 minutes. (If no operation is performed within 10 minutes, the login password of the inverter remains unchanged.)

----End

NOTICE

You are advised to reset the password in the morning or at night when the solar irradiance is low.

 Copyright © Huawei Technologies Co., Ltd.

B.2 Resetting the Password After Connecting to the Device and Obtaining the Verification Code

Prerequisites

1. The inverter is networked with the SmartLogger5000B, SmartMGC5000B, or Smart Dongle.
2. The inverter has been connected to the management system.
3. The inverter, SmartLogger5000B, SmartMGC5000B, or Smart Dongle, and app are of the latest versions.

Procedure

1. Log in to the app and choose **Services** > **Device Commissioning**.
2. Select **USB connection** and connect to the inverter using a USB data cable to access the **Log In** screen.

   NOTE

   - In the Smart Dongle networking scenario, you can connect a slave inverter (an inverter where the Smart Dongle is not installed) using a USB data cable to reset the password. The password of the master inverter (the inverter where the Smart Dongle is installed) cannot be reset. For details about how to reset the password of the master inverter, see **B.3 Resetting the Password After Obtaining the Verification Code and Connecting to the Device**.
   - Only Android phones can be directly connected to the inverter using a USB data cable. iOS phones are not supported.
3. On the **Log in** screen, select the user role whose password needs to be reset and tap **Forgot password?**.
4. On the **Reset Password** screen, choose **Get Code**.

   NOTE

   If you fail to obtain a verification code, reset the password by operating the AC switch and "DC SWITCH" of the inverter. For details, see section "Resetting a Password" in the inverter user manual.
5. Enter the login password of the app to obtain a verification code as prompted.

   NOTE

   The verification code is valid for 30 minutes. Enter it in the text box within the validity period.
6. On the **Reset Password** screen, enter the verification code and tap **OK**.

   NOTE

   The verification code will expire after 10 failed attempts. In that case, you need to obtain a new verification code.
7. On the **Log In** screen, set a new password.

Copyright © Huawei Technologies Co., Ltd.

NOTE

Set a new password to log in to the device again within 10 minutes.

Figure B-1 Login screen

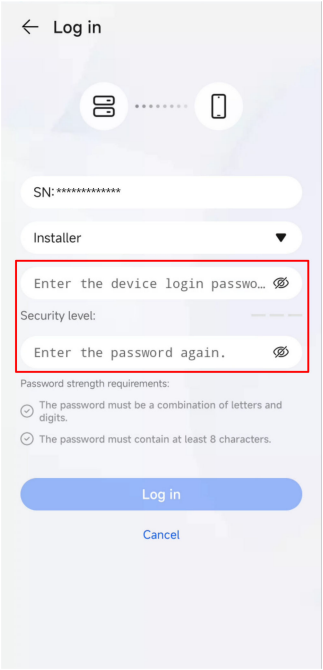

B.3 Resetting the Password After Obtaining the Verification Code and Connecting to the Device

Prerequisites

1. The inverter is networked with the SmartLogger5000B, SmartMGC5000B, or Smart Dongle.
2. The inverter has been connected to the management system.
3. The inverter, SmartLogger5000B, SmartMGC5000B, or Smart Dongle, and app are of the latest versions.

Procedure

1. Log in to the app and select the target plant on the home screen.
2. On the **Device** screen, choose **Inverter** > **: :** > **O&M Authorization** > **Device verification code**.
3. On the **Device verification code** screen, choose **Get Code**.

   NOTE

   If you fail to obtain a verification code, reset the password by operating the AC switch and "DC SWITCH" of the inverter. For details, see section "Resetting a Password" in the inverter user manual.

4. Enter the login password of the app to obtain a verification code as prompted.

Copyright © Huawei Technologies Co., Ltd.

NOTE

The verification code is valid for 30 minutes. Enter it in the text box within the validity period.

5. Select options as prompted and access the **Device Connection** screen.
6. Select **USB connection** and connect to the inverter using a USB data cable to access the **Log In** screen.

NOTE

- In the Smart Dongle networking scenario, to reset the password of the master inverter (the inverter where the Smart Dongle is installed), remove the Smart Dongle from the master inverter and then connect the master inverter using a USB data cable.
- Only Android phones can be directly connected to the inverter using a USB data cable. iOS phones are not supported.

7. On the **Log in** screen, select the user role whose password needs to be reset and tap **Forgot password?**.
8. On the **Reset Password** screen, enter the verification code and tap **OK**.

NOTE

The verification code will expire after 10 failed attempts. In that case, you need to obtain a new verification code.

9. On the **Log In** screen, set a new password.

NOTE

Set a new password to log in to the device again within 10 minutes.

Figure B-2 Login screen

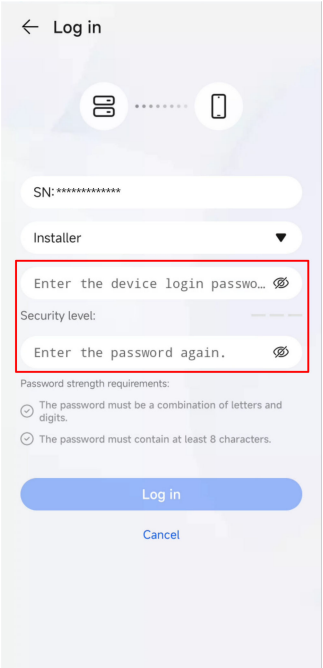

Copyright © Huawei Technologies Co., Ltd.

B.4 Resetting the Password on the SmartLogger WebUI

Prerequisites

1. The inverter has not been connected to the management system.
2. The inverter is networked with the SmartLogger5000B or SmartMGC5000B.
3. The inverter, SmartLogger5000B or SmartMGC5000B, and app are of the latest versions.

Procedure

1. Log in to the SmartLogger WebUI and choose **Maintenance** > **Security Management** > **Password Reset**.
2. Select the inverter for which the password needs to be reset.
3. Click **Reset** to obtain a verification code.

   NOTE

   The verification code is valid for 4 hours. Enter it in the text box within the validity period.
4. Log in to the app and choose **Services** > **Device Commissioning**.
5. Select **USB connection** and connect to the inverter using a USB data cable to access the **Log In** screen.
6. On the **Log in** screen, select the user role whose password needs to be reset and tap **Forgot password?**.
7. On the **Reset Password** screen, enter the verification code and tap **OK**.

   NOTE

   The verification code will expire after 10 failed attempts. In that case, you need to obtain a new verification code.
8. Select **USB connection** and connect to the inverter to access the **Log in** screen.
9. On the **Log In** screen, set a new password.

   NOTE

   Set a new password to log in to the device again within 10 minutes.

 Copyright © Huawei Technologies Co., Ltd.

Figure B-3 Login screen

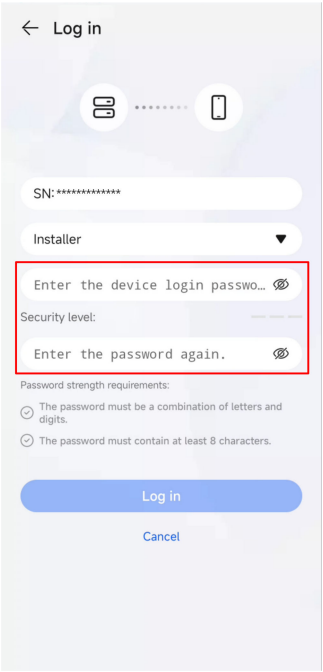

Copyright © Huawei Technologies Co., Ltd.

C Setting RCD Parameters

Function

A residual current device (RCD) detects residual current (that is, leakage current of an electrical system to ground, including the residual current of an inverter to the ground and the residual current of a PV module to the ground), and automatically disconnects the inverter from the power grid when residual current exceeds the preset threshold.

Procedure

1. **Connect to the inverter on the app** and log in to the local commissioning screen of the device.
2. Choose **Set** > **Feature parameters**. Set the parameters **RCD enhancing** and **Current Threshold for Triggering RCD Protection** as required.

Parameter	Description
Current Threshold for Triggering RCD Protection	Sets the residual current threshold for triggering RCD protection. If the residual current of the electrical system to ground is greater than the current threshold for triggering RCD protection, the inverter shuts down due to RCD protection. **NOTICE** • If the current threshold for triggering RCD protection is set to a smaller value, the inverter is more likely to be shut down due to RCD protection. Exercise caution when setting this parameter. • Adjusting the current threshold for triggering RCD protection may cause the inverter to frequently trigger the protection mechanism. In this case, you can increase the threshold to disable the protection mechanism. Exercise caution when setting this parameter. If you have any questions, contact the vendor or manufacturer.

 Copyright © Huawei Technologies Co., Ltd.

Parameter	Description
RCD enhancing	Enables or disables the RCD enhancement function. ● **Enable**: enables the RCD enhancement function. If the RCD enhancement function is enabled, the residual current of the inverter will decrease. You are advised to enable this function if an AC switch with a residual current detection function is installed outside the inverter or the inverter operates in a humid environment (for example, on rainy days) and the inverter frequently triggers RCD protection. ● **Disabled**: disables the RCD enhancement function. **NOTICE** Enabling the RCD enhancement function may cause power derating of the inverter.

Copyright © Huawei Technologies Co., Ltd.

D AFCI

Function

If PV modules or cables are incorrectly connected or damaged, electric arcs may be generated, which may cause fire. Huawei solar inverters provide arc detection meets the requirement of UL 1699B-2018, ensuring the user safety and property.

This function is enabled by default. The solar inverter automatically detects arc faults. To disable this function, log in to the app, enter the **Device Commissioning** screen, choose **Settings** > **Feature parameters**, and disable **AFCI**.

NOTE

The AFCI function works only with Huawei optimizers or ordinary PV modules when the inverter is connected to the grid, but does not support third-party optimizers or intelligent PV modules.

Clearing Alarms

The AFCI function involves the **DC arc fault** alarm.

The SUN2000 has the AFCI alarm automatic clearance mechanism. If an alarm is triggered for less than five times within 24 hours, the SUN2000 automatically clears the alarm. If the alarm is triggered for more than five times within 24 hours, the SUN2000 locks for protection. You need to manually clear the alarm on the SUN2000 so that it can work properly.

You can manually clear the alarm as follows:

- **Method 1**: App

  Log in to the app and choose **Device Commissioning**. On the **Device Commissioning** screen, connect and log in to the inverter that has generated the AFCI alarm, tap **Alarm management**, and tap **Delete** on the right of the **DC arc fault** alarm to clear the alarm.

  Figure D-1 Alarm management

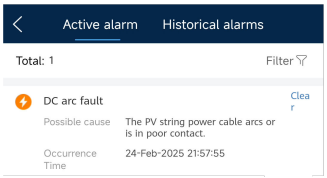

 Copyright © Huawei Technologies Co., Ltd.

- **Method 2**: Management system

  Log in to the management system using a non-owner account, choose **Maintenance** > **Alarm Management**, select **DC arc fault**, and click **Clear**.

  Figure D-2 Clearing alarms

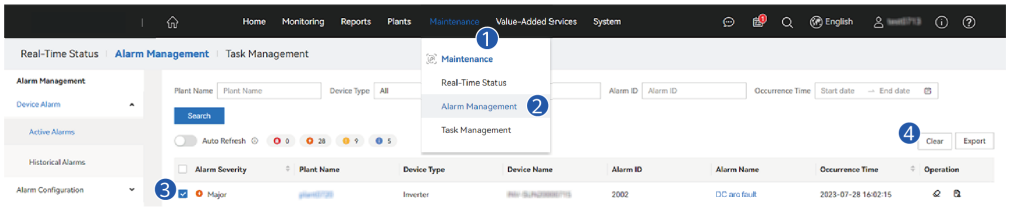

  Log in using the owner account with plant management rights. Click the plant name on the **Home** page to access the plant page, and click **OK** as prompted to clear the alarm.

Copyright © Huawei Technologies Co., Ltd.

E Connecting to a Device on the App (the Device Does Not Support WLAN)

Step 1 Start device commissioning.

Figure E-1 Method 1: mobile phone connected to the Internet

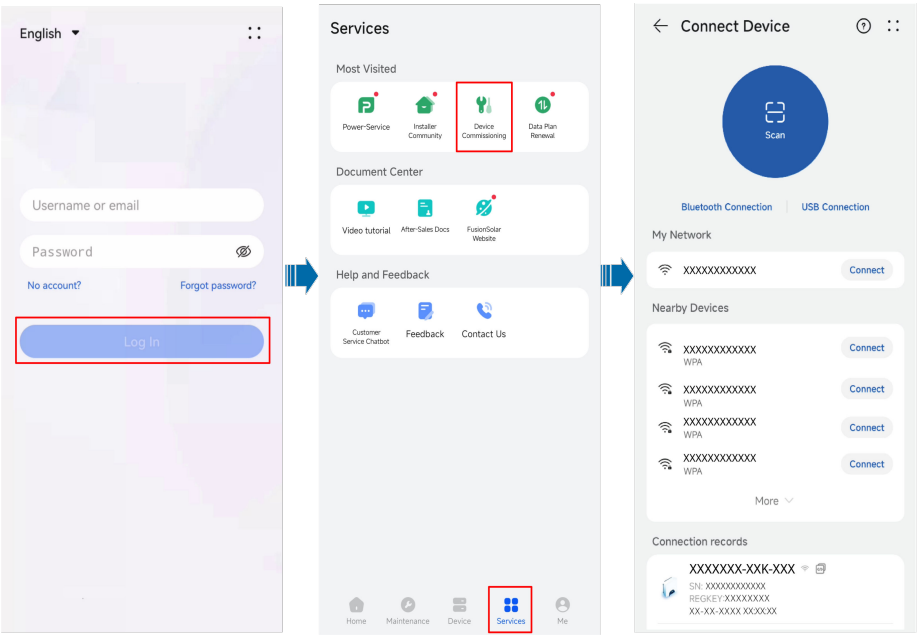

 Copyright © Huawei Technologies Co., Ltd.

Figure E-2 Method 2: mobile phone not connected to the Internet

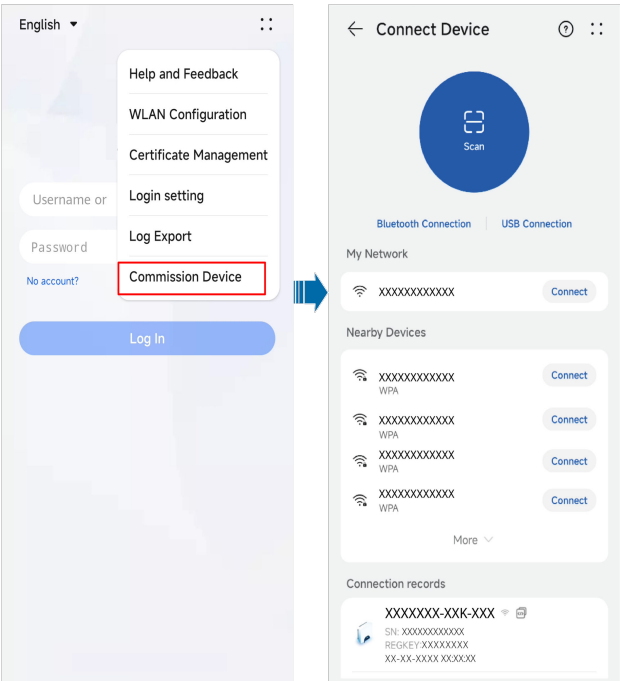

Step 2 Connect to the device.

Tap **USB connection** and connect to the device using a USB cable.

NOTE

- Only Android phones can be directly connected to the inverter using a USB data cable. iOS phones are not supported.

Step 3 Log in to the device commissioning screen as **Installer**.

NOTICE

- After completing the deployment settings, the installer shall remind the owner to access the local commissioning screen of the device and set the login password of the owner account as prompted.
- Ensure account security by changing the password periodically. Your password might be stolen or cracked if it is left unchanged for extended periods. If a password is lost, the device cannot be accessed. In these cases, the Company shall not be liable for any loss.

----End

 Copyright © Huawei Technologies Co., Ltd.

F Contact Information

If you have any questions about this product, please contact us.

https://digitalpower.huawei.com

Path: **About Us** > **Contact Us** > **Global Service Hotlines**

To ensure faster and better services, we kindly request your assistance in providing the following information:

- Model
- Serial number (SN)
- Software version
- Alarm ID or name
- Brief description of the fault symptom

 Copyright © Huawei Technologies Co., Ltd.

NOTE

EU Representative Information: Huawei Technologies Hungary Kft.
Add.: HU-1133 Budapest, Váci út 116-118., 1. Building, 6. floor.
Email: hungary.reception@huawei.com

G Digital Power Customer Service

https://digitalpower.huawei.com/robotchat/

Copyright © Huawei Technologies Co., Ltd.

H Acronyms and Abbreviations

L

LED	light emitting diode

M

MBUS	monitoring bus
MPP	maximum power point
MPPT	maximum power point tracking

P

PV	photovoltaic

R

RCMU	residual current monitoring unit

 Copyright © Huawei Technologies Co., Ltd.