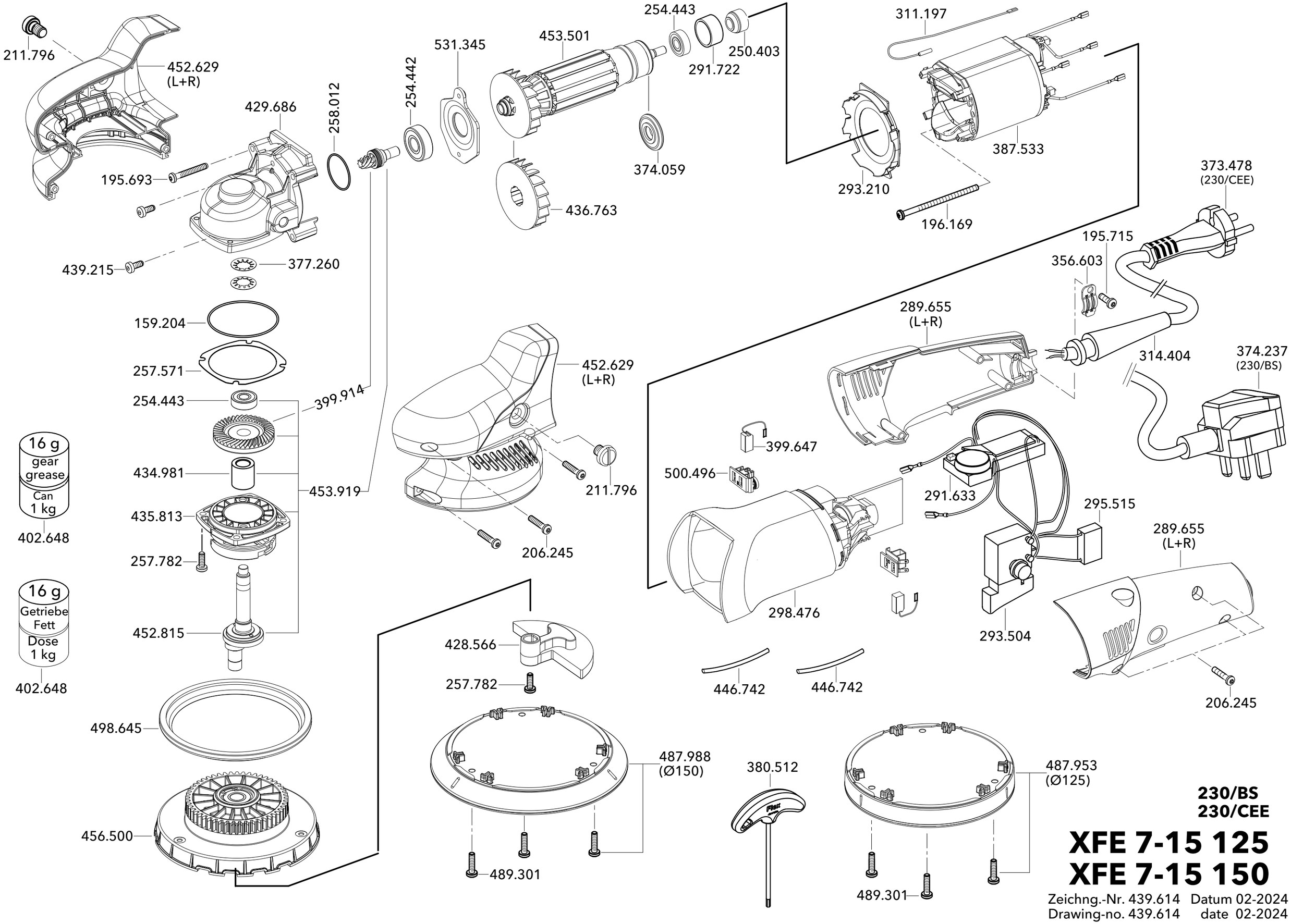

230/BS
230/CEE

XFE 7-15 125
XFE 7-15 150

Zeichng.-Nr. 439.614 Datum 02-2024
Drawing-no. 439.614 date 02-2024