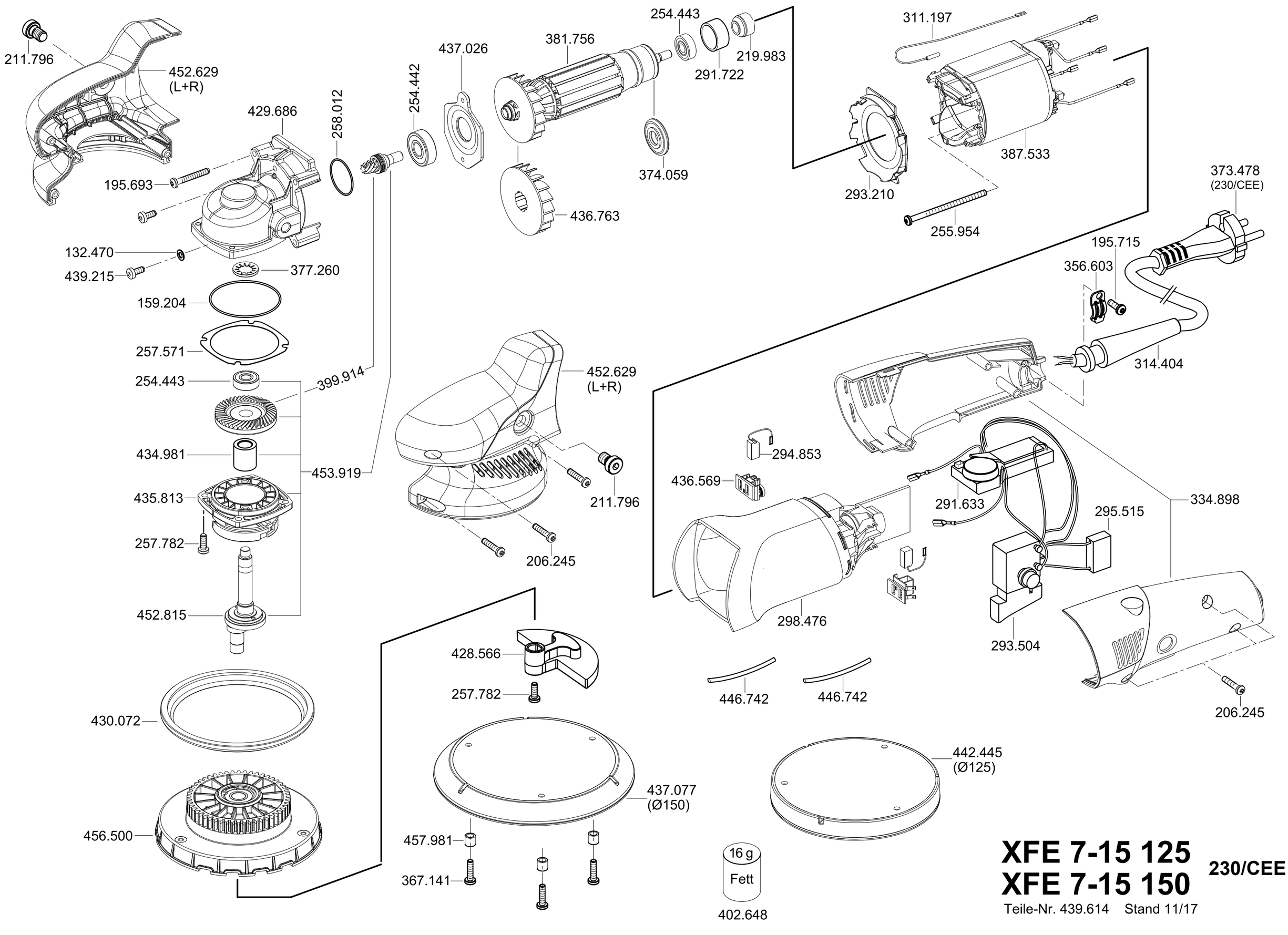

XFE 7-15 125
XFE 7-15 150

230/CEE

Teile-Nr. 439.614 Stand 11/17