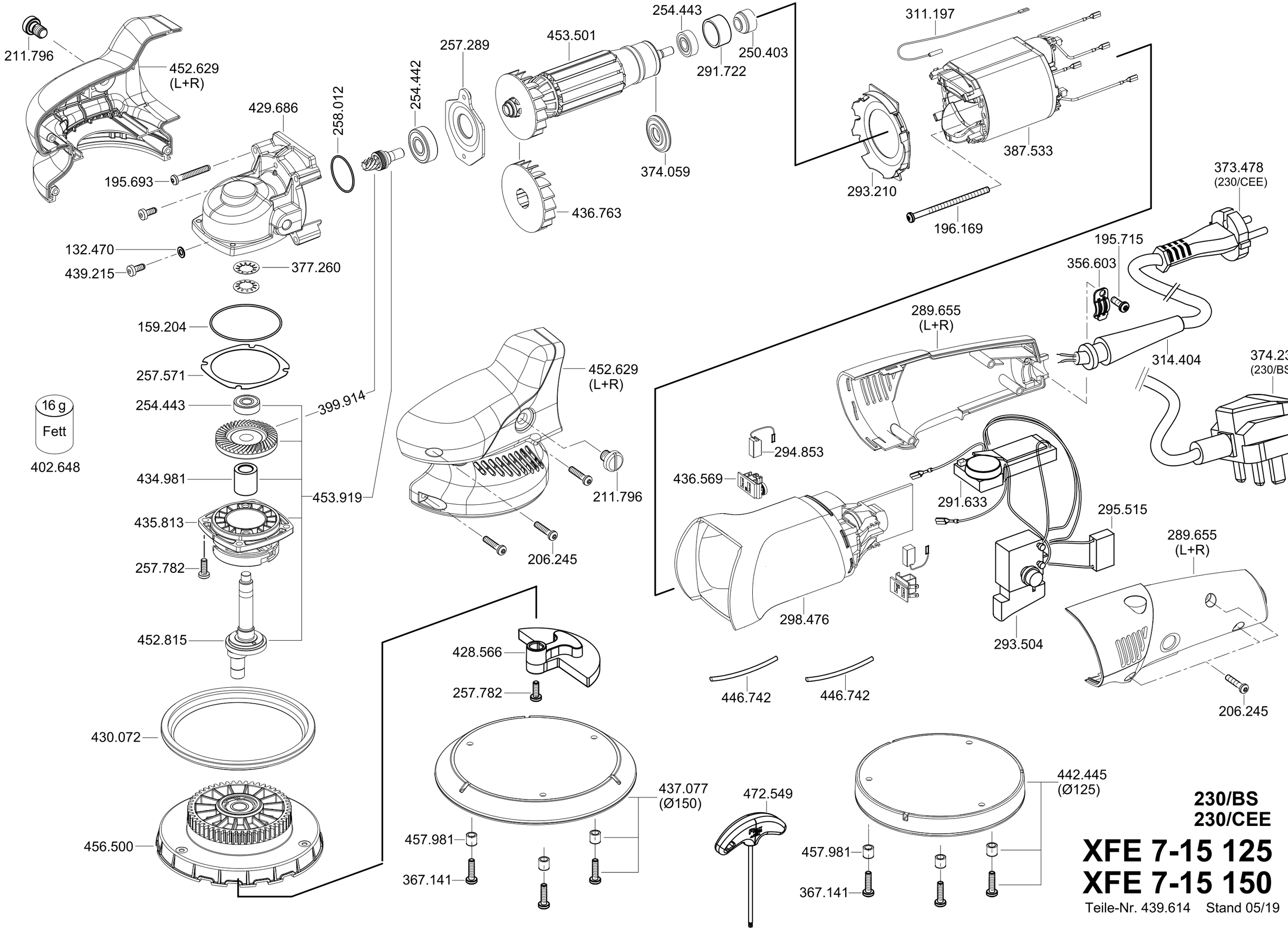

230/BS
230/CEE

XFE 7-15 125
XFE 7-15 150

Teile-Nr. 439.614 Stand 05/19