DEWALT®

XR®

www.DEWALT.com

DCF500

Copyright DEWALT

Fig. A

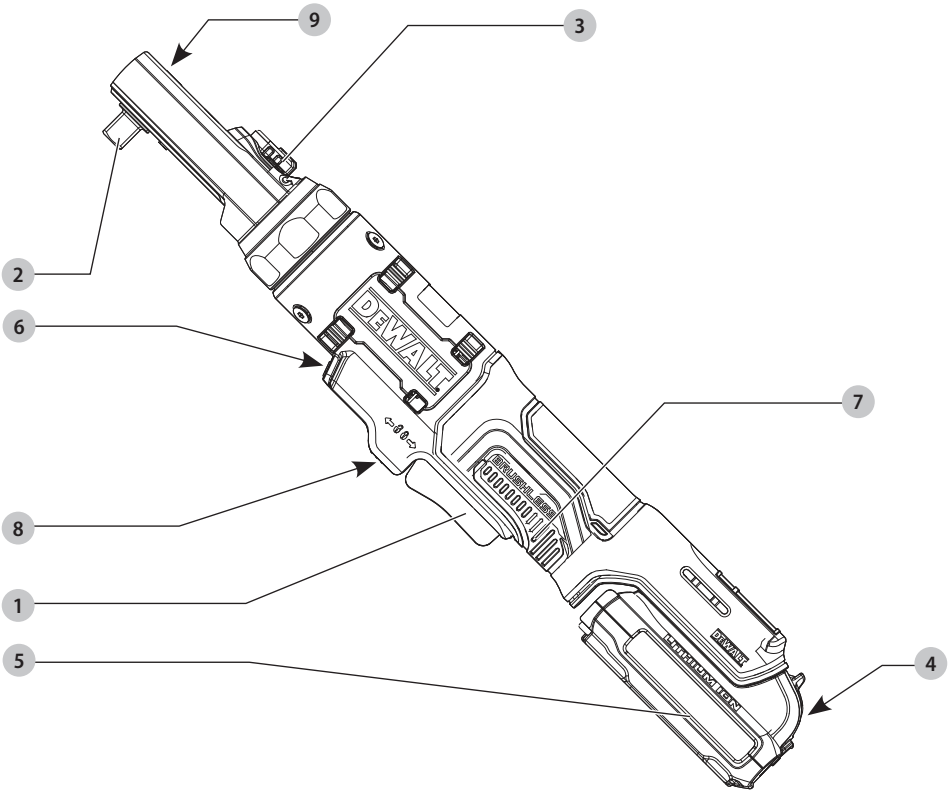
9
3
2
6
7
8
1
5
4
DEWALT
BRUSHLESS
DEWALT
LITHIUM ION

Fig. B

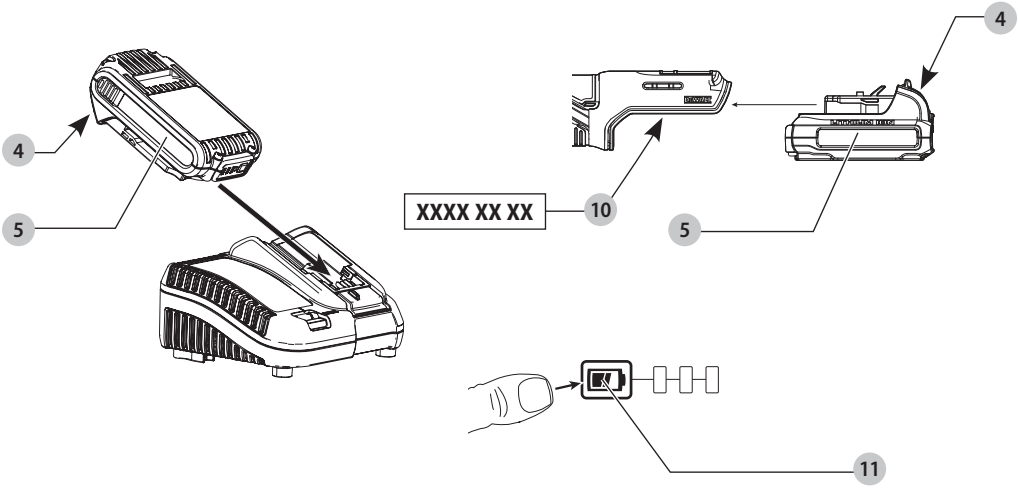
4
4
5
XXXX XX XX
10
5
11

Fig. C

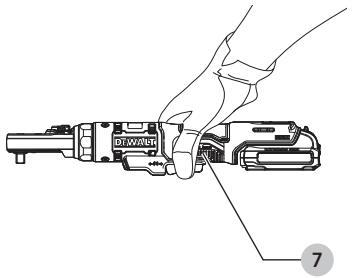

Fig. D

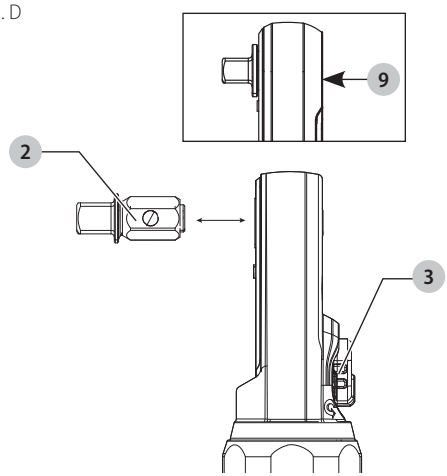

Fig. E

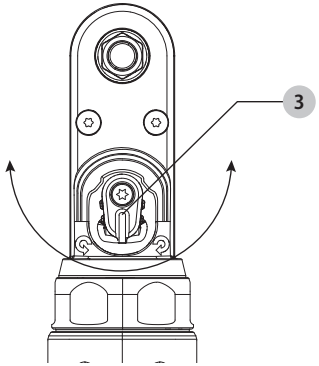

RATCHET
DCF500

Congratulations!

You have chosen a DEWALTtool. Years of experience, thorough product development and innovation make DEWALT one of the most reliable partners for professional power tool users.

Technical Data

		DCF500
Voltage	V_{DC}	12
Type		1
No load speed		0–450
Length	mm	330
Weight (without battery pack)	kg	0.88

Noise values and/or vibration values (triax vector sum) according to EN62841-2-2:		
L_{PA} (emission sound pressure level)	dB(A)	81
L_{WA} (sound power level)	dB(A)	89
K (uncertainty for the given sound level)	dB(A)	3

Vibration emission value a_h =	m/s²	3.4
Uncertainty K =	m/s²	1.5

The vibration and/or noise emission level given in this information sheet has been measured in accordance with a standardised test given in EN62841 and may be used to compare one tool with another. It may be used for a preliminary assessment of exposure.

WARNING: *The declared vibration and/or noise emission level represents the main applications of the tool. However, if the tool is used for different applications, with different accessories or is poorly maintained, the vibration and/or noise emission may differ. This may significantly increase the exposure level over the total working period.*

An estimation of the level of exposure to vibration and/or noise should also take into account the times when the tool is switched off or when it is running but not actually doing the job. This may significantly reduce the exposure level over the total working period.

Identify additional safety measures to protect the operator from the effects of vibration and/or noise such as: maintain the tool and the accessories, keep the hands warm (relevant for vibration), organisation of work patterns.

EC-Declaration of Conformity

Machinery Directive

Ratchet
DCF500

DEWALT declares that these products described under ***Technical Data*** are in compliance with:
2006/42/EC, EN 62841-1:2015 + A11:2022, EN 62841-2-2:2014 + AC:2015.

These products also comply with Directive 2014/30/EU and 2011/65/EU. For more information, please contact DEWALT at the following address or refer to the back of the manual.

The undersigned is responsible for compilation of the technical file and makes this declaration on behalf of DEWALT.

Markus Rompel
Vice-President Engineering, PTE-Europe
DEWALT, Richard-Klinger-Straße 11,
65510, Idstein, Germany
30.09.2024

WARNING: *To reduce the risk of injury, read the instruction manual.*

Definitions: Safety Guidelines

The definitions below describe the level of severity for each signal word. Please read the manual and pay attention to these symbols.

DANGER: *Indicates an imminently hazardous situation which, if not avoided,* ***will*** *result in* ***death or serious injury****.*

WARNING: *Indicates a potentially hazardous situation which, if not avoided,* ***could*** *result in* ***death or serious injury****.*

CAUTION: *Indicates a potentially hazardous situation which, if not avoided,* ***may*** *result in* ***minor or moderate injury****.*

NOTICE: *Indicates a practice* ***not related to personal injury*** *which, if not avoided,* ***may*** *result in* ***property damage****.*

Denotes risk of electric shock.

Denotes risk of fire.

Batteries				Chargers/Charge Times (Minutes)**								
Cat #	V_{DC}	Ah	Weight kg	DCB104	DCB107	DCB110	DCB112/ DCB1102	DCB113	DCB115/ DCB1104	DCB116	DCB132	DCB119
DCB122	12	2.0	0.22	30	90	90	60	50	30	30	30	60
DCB124/G	12	3.0	0.25	45	140	140	90	70	45	45	45	90
DCB125	12	1.3	0.20	22	60	60	40	30	22	22	22	40
DCB126/G	12	5.0	0.46	75	240	240	150	120	75	75	75	150
DCB127	12	2.0	0.22	30	90	90	60	50	30	30	30	60

***Battery charge times matrix provided for guidance only; charge times will vary depending on temperature and condition of batteries.*

GENERAL POWER TOOL SAFETY WARNINGS

WARNING: *Read all safety warnings, instructions, illustrations and specifications provided with this power tool. Failure to follow all instructions listed below may result in electric shock, fire and/or serious injury.*

SAVE ALL WARNINGS AND INSTRUCTIONS FOR FUTURE REFERENCE

The term "power tool" in the warnings refers to your mains-operated (corded) power tool or battery-operated (cordless) power tool.

1) Work Area Safety

a) ***Keep work area clean and well lit.*** *Cluttered or dark areas invite accidents.*

b) ***Do not operate power tools in explosive atmospheres, such as in the presence of flammable liquids, gases or dust.*** *Power tools create sparks which may ignite the dust or fumes.*

c) ***Keep children and bystanders away while operating a power tool.*** *Distractions can cause you to lose control.*

2) Electrical Safety

a) ***Power tool plugs must match the outlet. Never modify the plug in any way. Do not use any adapter plugs with earthed (grounded) power tools.*** *Unmodified plugs and matching outlets will reduce risk of electric shock.*

b) ***Avoid body contact with earthed or grounded surfaces, such as pipes, radiators, ranges and refrigerators.*** *There is an increased risk of electric shock if your body is earthed or grounded.*

c) ***Do not expose power tools to rain or wet conditions.*** *Water entering a power tool will increase the risk of electric shock.*

d) ***Do not abuse the cord. Never use the cord for carrying, pulling or unplugging the power tool. Keep cord away from heat, oil, sharp edges or moving parts.*** *Damaged or entangled cords increase the risk of electric shock.*

e) ***When operating a power tool outdoors, use an extension cord suitable for outdoor use.*** *Use of a cord suitable for outdoor use reduces the risk of electric shock.*

f) ***If operating a power tool in a damp location is unavoidable, use a residual current device (RCD) protected supply.*** *Use of an RCD reduces the risk of electric shock.*

3) Personal Safety

a) ***Stay alert, watch what you are doing and use common sense when operating a power tool. Do not use a power tool while you are tired or under the influence of drugs, alcohol or medication.*** *A moment of inattention while operating power tools may result in serious personal injury.*

b) ***Use personal protective equipment. Always wear eye protection.*** *Protective equipment such as a dust mask, non-skid safety shoes, hard hat or hearing protection used for appropriate conditions will reduce personal injuries.*

c) ***Prevent unintentional starting. Ensure the switch is in the off position before connecting to power source and/or battery pack, picking up or carrying the tool.*** *Carrying power tools with your finger on the switch or energising power tools that have the switch on invites accidents.*

d) ***Remove any adjusting key or wrench before turning the power tool on.*** *A wrench or a key left attached to a rotating part of the power tool may result in personal injury.*

e) ***Do not overreach. Keep proper footing and balance at all times.*** *This enables better control of the power tool in unexpected situations.*

f) ***Dress properly. Do not wear loose clothing or jewellery. Keep your hair and clothing away from moving parts.*** *Loose clothes, jewellery or long hair can be caught in moving parts.*

g) ***If devices are provided for the connection of dust extraction and collection facilities, ensure these are connected and properly used.*** *Use of dust collection can reduce dust-related hazards.*

h) ***Do not let familiarity gained from frequent use of tools allow you to become complacent and ignore tool safety principles.*** *A careless action can cause severe injury within a fraction of a second.*

4) Power Tool Use and Care

a) ***Do not force the power tool. Use the correct power tool for your application.*** *The correct power tool will do the job better and safer at the rate for which it was designed.*

b) ***Do not use the power tool if the switch does not turn it on and off.*** *Any power tool that cannot be controlled with the switch is dangerous and must be repaired.*

c) ***Disconnect the plug from the power source and/or remove the battery pack, if detachable, from the power tool before making any adjustments, changing accessories, or storing power tools.*** *Such preventive safety measures reduce the risk of starting the power tool accidentally.*

d) ***Store idle power tools out of the reach of children and do not allow persons unfamiliar with the power tool or these instructions to operate the power tool.*** *Power tools are dangerous in the hands of untrained users.*

e) ***Maintain power tools and accessories. Check for misalignment or binding of moving parts, breakage of parts and any other condition that may affect the power tool's operation. If damaged, have the power tool repaired before use.*** *Many accidents are caused by poorly maintained power tools.*

f) ***Keep cutting tools sharp and clean.*** *Properly maintained cutting tools with sharp cutting edges are less likely to bind and are easier to control.*

g) ***Use the power tool, accessories and tool bits, etc. in accordance with these instructions, taking into account the working conditions and the work to be performed.*** *Use of the power tool for operations different from those intended could result in a hazardous situation.*

h) ***Keep handles and grasping surfaces dry, clean and free from oil and grease.*** *Slippery handles and grasping surfaces do not allow for safe handling and control of the tool in unexpected situations.*

5) Battery Tool Use and Care

a) ***Recharge only with the charger specified by the manufacturer.*** *A charger that is suitable for one type of battery pack may create a risk of fire when used with another battery pack.*

b) ***Use power tools only with specifically designated battery packs.*** *Use of any other battery packs may create a risk of injury and fire.*

c) ***When battery pack is not in use, keep it away from other metal objects, like paper clips, coins, keys, nails, screws or other small metal objects, that can make a connection from one terminal to another.*** *Shorting the battery terminals together may cause burns or a fire.*

d) ***Under abusive conditions, liquid may be ejected from the battery; avoid contact. If contact accidentally occurs, flush with water. If liquid contacts eyes, additionally seek medical help.*** *Liquid ejected from the battery may cause irritation or burns.*

e) ***Do not use a battery pack or tool that is damaged or modified.*** *Damaged or modified batteries may exhibit unpredictable behaviour resulting in fire, explosion or risk of injury.*

f) ***Do not expose a battery pack or tool to fire or excessive temperature.*** *Exposure to fire or temperature above 130 °C may cause explosion.*

g) ***Follow all charging instructions and do not charge the battery pack or tool outside the temperature range specified in the instructions.*** *Charging improperly or at temperatures outside the specified range may damage the battery and increase the risk of fire.*

6) Service

a) ***Have your power tool serviced by a qualified repair person using only identical replacement parts.*** *This will ensure that the safety of the power tool is maintained.*

b) ***Never service damaged battery packs.*** *Service of battery packs should only be performed by the manufacturer or authorised service providers.*

Safety Instructions for Ratchet Tools

- ***Hold the power tool by insulated gripping surfaces, when performing an operation where the fastener may contact hidden wiring.*** *Fasteners contacting a "live" wire may make exposed metal parts of the tool "live" and could give the operator an electric shock.*
- ***Use clamps or another practical way to secure and support the workpiece to a stable platform.*** *Holding the work by your hand or against the body leaves it unstable and may lead to loss of control.*
- ***Air vents often cover moving parts and should be avoided.*** *Loose clothing, jewellery or long hair can be caught in moving parts.*
- ***Do not operate this tool for long periods of time. Vibration caused by tool action may be harmful to your hands and arms.*** *Use gloves to provide extra cushion and limit exposure by taking frequent rest periods.*
- ***Accessories and tools get hot during operation.*** *Wear gloves when touching them.*

Residual Risks

In spite of the application of the relevant safety regulations and the implementation of safety devices, certain residual risks cannot be avoided. These are:

- *Impairment of hearing.*
- *Risk of personal injury due to flying particles.*
- *Risk of burns due to accessories becoming hot during operation.*
- *Risk of personal injury due to prolonged use.*

Chargers

DEWALT chargers require no adjustment and are designed to be as easy as possible to operate.

Electrical Safety

The electric motor has been designed for one voltage only. Always check that the battery pack voltage corresponds to the voltage on the rating plate. Also make sure that the voltage of your charger corresponds to that of your mains.

Your DEWALT charger is double insulated in accordance with EN62841; therefore, no earth wire is required.

If the supply cord is damaged, it must be replaced only by DEWALT or an authorised service organisation.

Mains Plug Replacement (U.K. & Ireland Only)

If a new mains plug needs to be fitted:

- *Safely dispose of the old plug.*
- *Connect the brown lead to the live terminal in the plug.*
- *Connect the blue lead to the neutral terminal.*

WARNING: *No connection is to be made to the earth terminal.*

Follow the fitting instructions supplied with good quality plugs. Recommended fuse: 3 A.

Using an Extension Cable

An extension cord should not be used unless absolutely necessary. Use an approved extension cable suitable for the power input of your charger (see ***Technical Data***). The minimum conductor size is 1 mm^2; the maximum length is 30 m.

When using a cable reel, always unwind the cable completely.

Important Safety Instructions for All Battery Chargers

SAVE THESE INSTRUCTIONS: This manual contains important safety and operating instructions for compatible battery chargers (refer to ***Technical Data***).

- *Before using charger, read all instructions and cautionary markings on charger, battery pack, and product using battery pack.*

WARNING: *Shock hazard. Do not allow any liquid to get inside charger. Electric shock may result.*

WARNING: *We recommend the use of a residual current device with a residual current rating of 30mA or less.*

CAUTION: *Burn hazard. To reduce the risk of injury, charge only DEWALT rechargeable batteries. Other types of batteries may burst, causing personal injury and damage.*

CAUTION: *Children should be supervised to ensure that they do not play with the appliance.*

NOTICE: *Under certain conditions, with the charger plugged into the power supply, the exposed charging contacts inside the charger can be shorted by foreign material. Foreign materials of a conductive nature such as, but not limited to, steel wool, aluminum foil or any buildup of metallic particles should be kept away from charger cavities. Always unplug the charger from the power supply when there is no battery pack in the cavity. Unplug charger before attempting to clean.*

- ***DO NOT attempt to charge the battery pack with any chargers other than the ones in this manual.*** *The charger and battery pack are specifically designed to work together.*
- ***These chargers are not intended for any uses other than charging DEWALT rechargeable batteries.*** *Any other uses may result in risk of fire, electric shock or electrocution.*
- ***Do not expose charger to rain or snow.***
- ***Pull by plug rather than cord when disconnecting charger.*** *This will reduce risk of damage to electric plug and cord.*
- ***Make sure that cord is located so that it will not be stepped on, tripped over, or otherwise subjected to damage or stress.***
- ***Do not use an extension cord unless it is absolutely necessary.*** *Use of improper extension cord could result in risk of fire, electric shock, or electrocution.*
- ***Do not place any object on top of charger or place the charger on a soft surface that might block the ventilation slots and result in excessive internal heat.*** *Place the charger in a position away from any heat source. The charger is ventilated through slots in the top and the bottom of the housing.*
- ***Do not operate charger with damaged cord or plug—*** *have them replaced immediately.*
- ***Do not operate charger if it has received a sharp blow, been dropped, or otherwise damaged in any way.*** *Take it to an authorised service centre.*
- ***Do not disassemble charger; take it to an authorised service centre when service or repair is required.*** *Incorrect reassembly may result in a risk of electric shock, electrocution or fire.*
- *In case of damaged power supply cord, the supply cord must be replaced immediately by the manufacturer, its service agent or similar qualified person to prevent any hazard.*
- ***Disconnect the charger from the outlet before attempting any cleaning. This will reduce the risk of electric shock.*** *Removing the battery pack will not reduce this risk.*
- ***NEVER*** *attempt to connect two chargers together.*
- ***The charger is designed to operate on standard 230V household electrical power. Do not attempt to use it on any other voltage.*** *This does not apply to the vehicular charger.*

Charging a Battery (Fig. B)

NOTE: To ensure maximum performance and life of lithium-ion battery packs, charge the battery pack fully before first use.

1. Plug the charger into an appropriate outlet before inserting battery pack.
2. Insert the battery pack 5 into the charger, making sure the battery pack is fully seated in the charger. The red (charging) light will blink repeatedly indicating that the charging process has started.
3. The Stage 1 charging blink indicator represents the charge process that charges the majority of the battery's capacity. Stage 2 charging blink indicator represents the remainder, or top off charge process, for the battery to reach full capacity.

4. The completion of charge for Stage 1 or Stage 2 will be indicated by the stage's light remaining ON continuously. The battery pack is fully charged when both Stage 1 and Stage 2 charging lights remain ON continuously, and it may be removed and used at this time or left in the charger.

NOTE: To remove the battery pack, some chargers require the battery pack release button ❹ to be pressed.

Refer to the indicators below for the charge status of the battery pack.

Indicators	
	Stage 1 Charging
	Stage 2 Charging
	Fully Charged
	Hot/Cold Pack Delay*

*The red light will continue to blink, but a yellow indicator light will be illuminated during this operation. Once the battery pack has reached an appropriate temperature, the yellow light will turn off and the charger will resume the charging procedure.

The compatible charger(s) will not charge a faulty battery pack. The charger will indicate faulty battery by refusing to light.

NOTE: This could also mean a problem with a charger.

If the charger indicates a problem, take the charger and battery pack to be tested at an authorised service centre.

Hot/Cold Pack Delay

When the charger detects a battery pack that is too hot or too cold, it automatically starts a Hot/Cold Pack Delay, suspending charging until the battery pack has reached an appropriate temperature. The charger then automatically switches to the pack charging mode. This feature ensures maximum battery pack life.

A cold battery pack will charge at a slower rate than a warm battery pack. The battery pack will charge at that slower rate throughout the entire charging cycle and will not return to maximum charge rate even if the battery pack warms.

The DCB118 charger is equipped with an internal fan designed to cool the battery pack. The fan will turn on automatically when the battery pack needs to be cooled. Never operate the charger if the fan does not operate properly or if ventilation slots are blocked. Do not permit foreign objects to enter the interior of the charger.

Electronic Protection System

XR Li-Ion tools are designed with an Electronic Protection System that will protect the battery pack against overloading, overheating or deep discharge.

The tool will automatically turn off if the Electronic Protection System engages. If this occurs, place the lithium-ion battery pack on the charger until it is fully charged.

Wall Mounting

These chargers are designed to be wall mountable or to sit upright on a table or work surface. If wall mounting, locate the charger within reach of an electrical outlet, and away from a corner or other obstructions which may impede air flow. Use the back of the charger as a template for the location of the mounting screws on the wall. Mount the charger securely using drywall screws (purchased separately) at least 25.4 mm long with a screw head diameter of 7–9 mm, screwed into wood to an optimal depth leaving approximately 5.5 mm of the screw exposed. Align the slots on the back of the charger with the exposed screws and fully engage them in the slots.

Charger Cleaning Instructions

WARNING: Shock hazard. Disconnect the charger from the AC outlet before cleaning. *Dirt and grease may be removed from the exterior of the charger using a cloth or soft non-metallic brush. Do not use water or any cleaning solutions. Never let any liquid get inside the tool; never immerse any part of the tool into a liquid.*

Battery Packs

Important Safety Instructions for All Battery Packs

When ordering replacement battery packs, be sure to include catalogue number and voltage.

The battery pack is not fully charged out of the carton. Before using the battery pack and charger, read the safety instructions below. Then follow charging procedures outlined.

READ ALL INSTRUCTIONS

- ***Do not charge or use battery in explosive atmospheres, such as in the presence of flammable liquids, gases or dust.*** *Inserting or removing the battery from the charger may ignite the dust or fumes.*
- ***Never force battery pack into charger. Do not modify battery pack in any way to fit into a non-compatible charger as battery pack may rupture, causing serious personal injury.***
- *Charge the battery packs only in DEWALT chargers.*
- ***DO NOT*** *splash or immerse in water or other liquids.*
- ***Do not store or charge the battery pack in locations where the temperature may fall below 4 ˚C (39.2 ˚F) (such as outside sheds or metal buildings in winter), or reach or exceed 40 ˚C (104 ˚F) (such as outside sheds or metal buildings in summer).***
- ***Do not incinerate the battery pack even if it is severely damaged or is completely worn out.*** *The battery pack can explode in a fire. Toxic fumes and materials are created when lithium-ion battery packs are burned.*
- ***If battery contents come into contact with the skin, immediately wash area with mild soap and water.*** *If battery liquid gets into the eye, rinse water over the open eye for 15 minutes or until irritation ceases. If medical attention is needed, the battery electrolyte is composed of a mixture of liquid organic carbonates and lithium salts.*
- ***Contents of opened battery cells may cause respiratory irritation.*** *Provide fresh air. If symptoms persist, seek medical attention.*

WARNING: *Burn hazard. Battery liquid may be flammable if exposed to spark or flame.*

WARNING: *Never attempt to open the battery pack for any reason. If battery pack case is cracked or damaged, do not insert into charger. Do not crush, drop or damage battery pack. Do not use a battery pack or charger that has received a sharp blow, been dropped, run over or damaged in any way (i.e., pierced with a nail, hit with a hammer, stepped on). Electric shock or electrocution may result. Damaged battery packs should be returned to service centre for recycling.*

WARNING: Fire hazard. Do not store or carry the battery pack so that metal objects can contact exposed battery terminals. *For example, do not place the battery pack in aprons, pockets, tool boxes, product kit boxes, drawers, etc., with loose nails, screws, keys, etc.*

CAUTION: When not in use, place tool on its side on a stable surface where it will not cause a tripping or falling hazard. *Some tools with large battery packs will stand upright on the battery pack but may be easily knocked over.*

Transportation

WARNING: Fire hazard. *Transporting batteries can possibly cause fire if the battery terminals inadvertently come into contact with conductive materials. When transporting batteries, make sure that the battery terminals are protected and well-insulated from materials that could contact them and cause a short circuit.* ***NOTE:*** *Lithium-ion batteries should not be put in checked baggage.*

DEWALT batteries comply with all applicable shipping regulations as prescribed by industry and legal standards, which include UN Recommendations on the Transport of Dangerous Goods; International Air Transport Association (IATA) Dangerous Goods Regulations; International Maritime Dangerous Goods (IMDG) Regulations; and the European Agreement Concerning The International Carriage of Dangerous Goods by Road (ADR). Lithium-ion cells and batteries have been tested to section 38.3 of the UN Recommendations on the Transport of Dangerous Goods Manual of Tests and Criteria.

In most instances, shipping a DEWALT battery pack will be excepted from being classified as a fully regulated Class 9 Hazardous Material. In general, only shipments containing a lithium-ion battery with an energy rating greater than 100 Watt Hours (Wh) will require being shipped as fully regulated Class 9. All lithium-ion batteries have the Wh rating marked on the pack. Furthermore, due to regulation complexities, DEWALT does not recommend air shipping lithium-ion battery packs alone regardless of Wh rating. Shipments of tools with batteries (combo kits) can be air shipped as excepted if the Wh rating of the battery pack is no greater than 100 Wh.

Regardless of whether a shipment is considered excepted or fully regulated, it is the shipper's responsibility to consult the latest regulations for packaging, labeling/marking and documentation requirements.

The information provided in this section of the manual is provided in good faith and believed to be accurate at the time the document was created. However, no warranty, expressed or implied, is given. It is the buyer's responsibility to ensure that its activities comply with the applicable regulations.

Storage Recommendations

1. The best storage place is one that is cool and dry away from direct sunlight and excessive heat or cold. For optimum battery performance and life, store battery packs at room temperature when not in use.
2. For long storage, it is recommended to store a fully charged battery pack in a cool, dry place out of the charger for optimal results.

NOTE: Battery packs should not be stored completely depleted of charge. The battery pack will need to be recharged before use.

Labels on Charger and Battery Pack

In addition to the pictographs used in this manual, the labels on the charger and the battery pack may show the following pictographs:

Read instruction manual before use.

Refer to ***Technical Data*** for charging time.

Do not probe with conductive objects.

Do not charge damaged battery packs.

Do not expose to water.

Have defective cords replaced immediately.

+40°c
+4°c

Charge only between 4 °C and 40 °C.

Only for indoor use.

LI-ION

Discard the battery pack with due care for the environment.

XXXXXX

Charge battery packs only with designated DEWALT chargers. Charging battery packs other than the designated DEWALT batteries with a DEWALT charger may make them burst or lead to other dangerous situations.

Do not incinerate the battery pack.

Battery Type

These battery packs may be used: DCB122, DCB124, DCB124G, DCB125, DCB126, DCB126G, DCB127. Refer to ***Technical Data*** for more information.

Markings on Tool

The following pictograms are shown on the tool:

Read instruction manual before use.

Visible radiation. Do not stare into light.

Date Code Position (Fig. A)

The production date code 10 consists of a 4-digit year followed by a 2-digit week and is extended by a 2-digit factory code.

Description (Fig. A)

WARNING: *Never modify the power tool or any part of it. Damage or personal injury could result.*

1. Trigger switch
2. Removable anvil
3. Forward/reverse switch
4. Battery release button
5. Battery pack
6. Worklight
7. Main handle
8. Lock-off button
9. Anvil release button

Intended Use

These powered ratchets are designed for light duty fastening applications. These powered ratchets are not torque wrenches. **DO NOT** use this tool for tightening fasteners to specified torques. An independent calibrated torque measurement device such as a torque wrench should be used when torques are specified.

DO NOT use under wet conditions or in the presence of flammable liquids or gases.

These powered ratchets are professional power tools.

DO NOT let children come into contact with the tool. Supervision is required when inexperienced operators use this tool.

- **Young children and the infirm.** This appliance is not intended for use by young children or infirm persons without supervision.
- This product is not intended for use by persons (including children) suffering from diminished physical, sensory or mental abilities; lack of experience, knowledge or skills unless they are supervised by a person responsible for their safety. Children should never be left alone with this product.

ASSEMBLY AND ADJUSTMENTS

WARNING: To reduce the risk of serious personal injury, turn tool off and disconnect battery pack before making any adjustments or removing/installing attachments or accessories. *An accidental start-up can cause injury.*

WARNING: *Use only DEWALT batteries and chargers.*

Inserting and Removing the Battery Pack from the Tool (Fig. B, K)

NOTE: Make sure your battery pack 5 is fully charged.

To Install the Battery Pack into the Tool Handle

1. Align the battery pack with the rails inside the tool's handle (Fig. B).
2. Slide it into the handle until the battery pack is firmly seated in the tool and ensure that you hear the lock snap into place.

To Remove the Battery Pack from the Tool

1. Press the battery release button 4 and firmly pull the battery pack out of the tool handle.
2. Insert battery pack into the charger.

Fuel Gauge Battery Packs (Fig. B)

Some DEWALT battery packs include a fuel gauge 11, which consists of three green LED lights that indicate the level of charge remaining in the battery pack.

To actuate the fuel gauge, press and hold the fuel gauge button. A combination of the three green LED lights will illuminate, designating the level of charge left. When the level of charge in the battery is below the usable limit, the fuel gauge will not illuminate and the battery will need to be recharged.

NOTE: The fuel gauge is only an indication of the charge left on the battery pack. It does not indicate tool functionality and is subject to variation based on product components, temperature and end-user application.

Anvil (Fig. D)

CAUTION: *Inspect anvil prior to use. Missing or damaged items should be replaced before use.*

NOTE: The DCF500 ships with 3/8", 1/4" square anvils and a 1/4" quick change hex.

To install an accessory on the anvil, align the accessory with the anvil 2. Press the accessory onto the anvil 2.

To remove an accessory, pull the accessory off the anvil 2.

OPERATION

Instructions for Use

WARNING: *Always observe the safety instructions and applicable regulations.*

WARNING: To reduce the risk of serious personal injury, turn tool off and disconnect battery pack before making any adjustments or removing/installing attachments or accessories. *An accidental start-up can cause injury.*

Proper Hand Position (Fig. C)

WARNING: *To reduce the risk of serious personal injury,* ***ALWAYS*** *use proper hand position as shown.*

WARNING: *To reduce the risk of serious personal injury,* ***ALWAYS*** *hold securely in anticipation of a sudden reaction.*

WARNING: *Ratchet may stall (if overloaded or improperly used), causing a twist. Always expect the stall. Grip the*

ratchet firmly to control the twisting action and prevent loss of control which could cause personal injury.

Proper hand position requires one hand on the main handle ❼ as shown to control the twisting action of the ratchet.

Variable Speed Trigger (Fig. A)

The tool is turned on and off by pulling and releasing the variable speed trigger ❶. The farther the trigger is depressed, the higher the speed of the tool. The anvil will stop as soon as the variable speed trigger is fully released.

Forward/Reverse Switch (Fig. E)

A forward/reverse switch ❸ determines the rotational direction of the tool.

- To select forward rotation (clockwise), release the trigger and slide the forward/reverse switch ❸ on the head of the tool in a counterclockwise direction.
- To select reverse rotation (counterclockwise), release the trigger and slide the forward/reverse switch ❸ on the head of the tool in a clockwise direction.

NOTE: The first time the tool is run after changing the direction of rotation, you may hear a click on start-up. This is normal and does not indicate a problem.

Lock-off Button (Fig. A)

To lock the tool, slide the lock-off button ❽ to the locked position. When the lock-off button is in the locked position, the tool is locked and the trigger switch ❶ cannot be pulled.

Worklight (Fig. A)

There is a worklight ❻ located on the foot of the tool. The worklight is activated when the trigger switch is depressed. When the trigger is released, the worklight will stay illuminated for up to 20 seconds.

NOTE: The worklight is for lighting the immediate work surface and is not intended to be used as a flashlight.

Usage (Fig. A, C)

WARNING: To reduce the risk of serious personal injury, turn unit off and remove the battery pack before making any adjustments or removing/ installing attachments or accessories. *An accidental start-up can cause injury.*

WARNING: *The ratchet may stall if overloaded causing a sudden twist. Always expect the tool to twist. Grip the ratchet firmly to control the twisting action and avoid possible personal injury.*

CAUTION: *Ensure fastener and/or system will withstand the level of torque generated by the tool. Excessive torque may cause breakage and possible personal injury.*

Cat #	RPM	Ft.-Lbs.	Nm
DCF500	0–450	50 (Max.)	67.79 (Max.)

1. Install the appropriate anvil ❷ (3/8", 1/4" or 1/4" Quick Change Hex) on the tool.
   a. If an anvil is installed on the tool, push the release button ❾ on the backside of the tool and remove the anvil.
   b. To install an anvil, push the desired anvil into the tool until it is secure.
2. Place the accessory on the fastener head.
3. Consider the intended operation and select either forward or reverse rotation.
4. Press variable speed trigger switch ❶ to start operation.
5. Release variable speed trigger switch ❶ to stop operation.
6. If the ratchet stalls, the tool is overloaded or is being improperly used. Release the variable speed trigger switch ❶ immediately. Do not press the variable speed trigger switch ❶ on and off in an attempt to start a stalled ratchet. Doing so can damage the tool.
7. The ratchet can also be used manually for breaking free stubborn fasteners or snugging by releasing the trigger and applying the torque by hand.
   NOTE: Excessive manual torque may damage the included anvils.

MAINTENANCE

Your power tool has been designed to operate over a long period of time with a minimum of maintenance. Continuous satisfactory operation depends upon proper tool care and regular cleaning.

WARNING: To reduce the risk of serious personal injury, turn tool off and disconnect battery pack before making any adjustments or removing/ installing attachments or accessories. *An accidental start-up can cause injury.*

The charger and battery pack are not serviceable.

Please refer to the back page of this manual for service centre contact information, or visit **www.2helpU.com**.

Lubrication

Your power tool requires no additional lubrication.

Cleaning

WARNING: *Electrical shock and mechanical hazard. Remove the battery before cleaning.*

WARNING: *To ensure safe and efficient operation, always keep the electrical appliance and the ventilation slots clean.*

WARNING: *Never use solvents or other harsh chemicals for cleaning the non-metallic parts of the tool. These chemicals may weaken the materials used in these parts. Use a cloth dampened only with water and mild soap. Never let any liquid get inside the tool; never immerse any part of the tool into a liquid.*

Ventilation slots can be cleaned using a dry, soft non-metallic brush and/or a suitable vacuum cleaner. Do not use water or any cleaning solutions. Wear approved eye protection and an approved dust mask.

Optional Accessories

WARNING: *Since accessories, other than those offered by DEWALT, have not been tested with this product, use of such accessories with this tool could be hazardous. To reduce the risk of injury, only DEWALT-recommended accessories should be used with this product.*

Consult your dealer for further information on the appropriate accessories.

Protecting the Environment

Products/batteries are recyclable, but if marked with the crossed-out bin, they must not be disposed of with normal household waste.

Run the batteries down completely and separate them, and separate any light sources from the product if possible. It is the user's responsibility to delete personal data from the product. Then take the waste to an official waste collection center or a participating retailer who will often accept it free of charge. Packaging should be discarded based on the marked material code. Operating and safety instructions should only be discarded once the applicable product is no longer in use.

Please check with your local community/municipality for waste management guidance. For further information, visit **www.2helpU.com** and scan the above QR code.

Australia / New Zealand	Tel: Aust Tel: NZ	1800 338 002 0800 339 258	www.dewalt.com.au www.dewalt.co.nz support@dewalt.au support@dewalt.co.nz
Belgique et Luxembourg België en Luxemburg	Tel: NL Tel: FR	32 15 47 37 63 32 15 47 37 64	www.dewalt.be support@dewalt.be support@dewalt.be.fr
Danmark	Tel:	70 20 15 10	www.dewalt.dk support@dewalt.dk
Deutschland	Tel:	06126-21-0	www.dewalt.de support@dewalt.de
Ελλάς	Τηλ:	00302108981616	www.dewalt.gr support@dewalt.gr
España	Tel:	934 797 400	www.dewalt.es support@dewalt.es
France	Tel:	04 72 20 39 20	www.dewalt.fr support@dewalt.fr
Schweiz, Suisse, Svizzera	Tel:	044 - 755 60 70	www.dewalt.ch support@dewalt.ch.de support@dewalt.ch.fr support@dewalt.ch.it
Ireland	Tel:	00353-2781800	www.dewalt.ie support@dewalt.ie
Italia	Tel:	800-014353 39 039-9590200	www.dewalt.it support@dewalt.it
Nederlands	Tel:	31 164 283 063	www.dewalt.nl support@dewalt.nl
Norge	Tel:	45 25 13 00	www.dewalt.no support@dewalt.no
Österreich	Tel:	01 - 66116 - 0	www.dewalt.at support@dewalt.at
Portugal	Tel:	+351 214667500	www.dewalt.pt support@dewalt.pt
Suomi	Puh:	010 400 4333	www.dewalt.fi support@dewalt.fi
Sverige	Tel:	031 68 61 60	www.dewalt.se support@dewalt.se
Türkiye	Tel:	+90 216 665 2900	tr.dewalt.global support@dewalt.com.tr
United Kingdom	Tel:	(+44) (0)1753 260094	www.dewalt.co.uk support@dewalt.co.uk
Middle East Africa	Tel:	971 4 812 7400	www.dewalt.ae support@dewalt.ae